Valve Features	
Maximum working pressure	3000psig
Working temperature	-198℃~454℃
Orifice	3mm
CV	0.3

IDX	Component	Materials
1	Nut	316L/A479
2	Rear Ferrules	316L/A479
3	Front Ferrules	316L/A479
4	Stem	316L/A479
5	Springs	316L/A313
6	Stem sleeve	316L/A479
7	Snap rings	316 L/A313
8	Stem insert	316L/A479

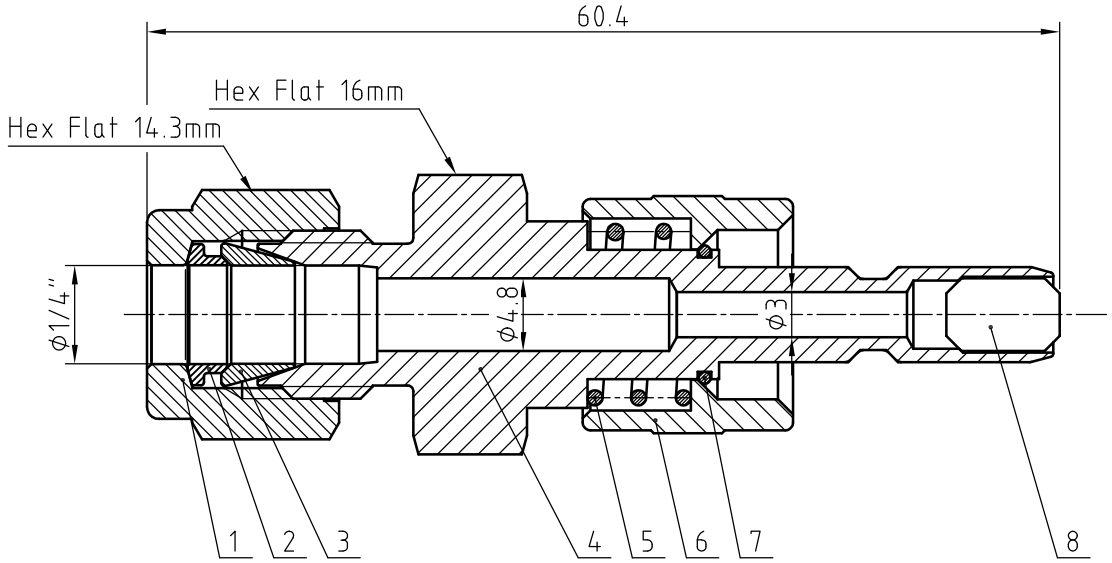

NOTE:Dimensions for reference only.

Linear unit of size: mm			Quick-Connect Stem	НТА-ПРОМ ТЕХНОЛОГИИ РЕШЕНИЯ СЕРВИС
	signature	date		
design			versions 1 proportion 2:1	QCN1SA-D-4T-SA
audit				
ratify			Page 1/1	