Valve Features	
Maximum working pressure	1000 psig
Working temperature	-28°C~232°C
Orifice	7.1mm
Cv	2.5

IDX	Component	Materials
1	End Connection	316 L/A479
2	Back Seat	PTFE
3	Ball	316 L/A479
4	Stem	316 L/A479
5	Front Seat	PTFE
6	Lower Packing	PTFE
7	Stop Pin	Stainless Steel
8	Body	316 L/A479
9	Upper Packing	PTFE
10	Washer	316 L/A479
11	Gasket	Stainless Steel
12	Stem Nut	Stainless Steel
13	Handle	Stainless Steel
14	Sleeve	PVC

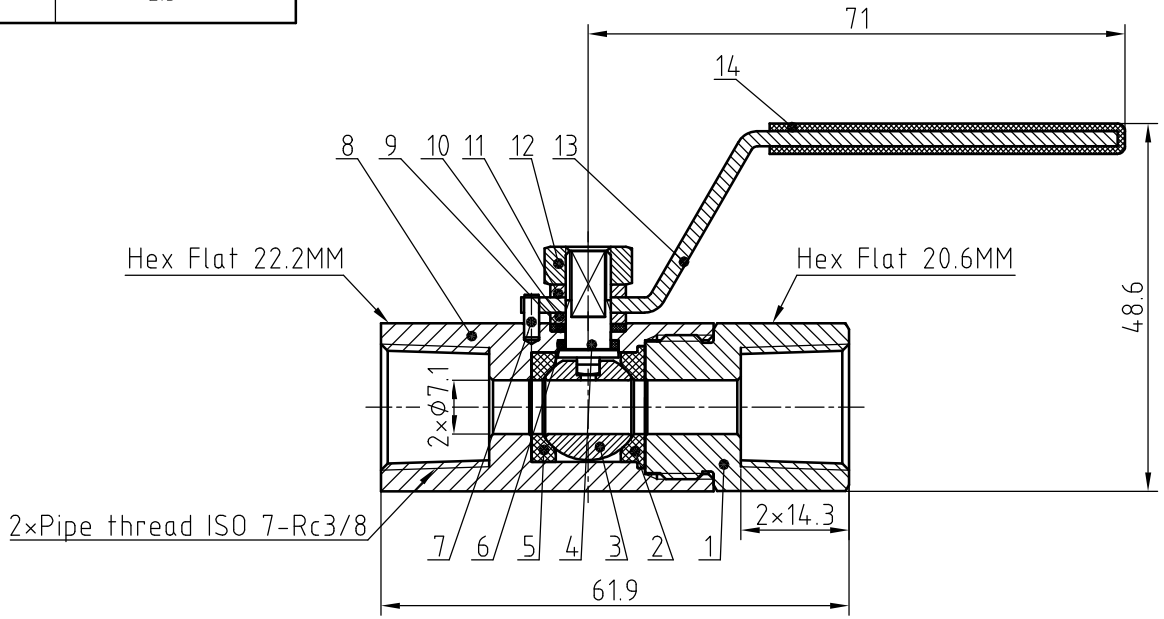

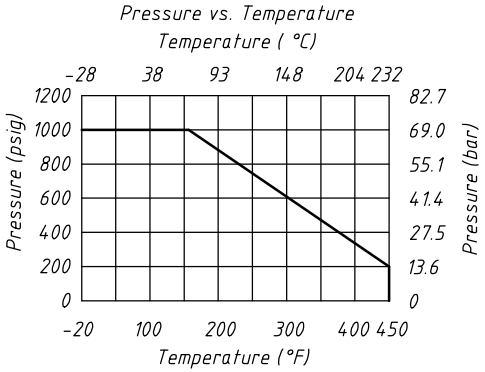

NOTE:Dimensions for reference only.

Linear unit of size: mm			Ball Valve				НТА-ПРОМ ТЕХНОЛОГИИ РЕШЕНИЯ СЕРВИС
	signature	date					
design			versions	1	proportion	1:1	BVN5-2B-F-6R-S
audit							
ratify					Page 1/1		