Valve Features	
Maximum working pressure	1000 psig
Working temperature	-28°C~232°C
Orifice	8.9mm
Cv	5.3

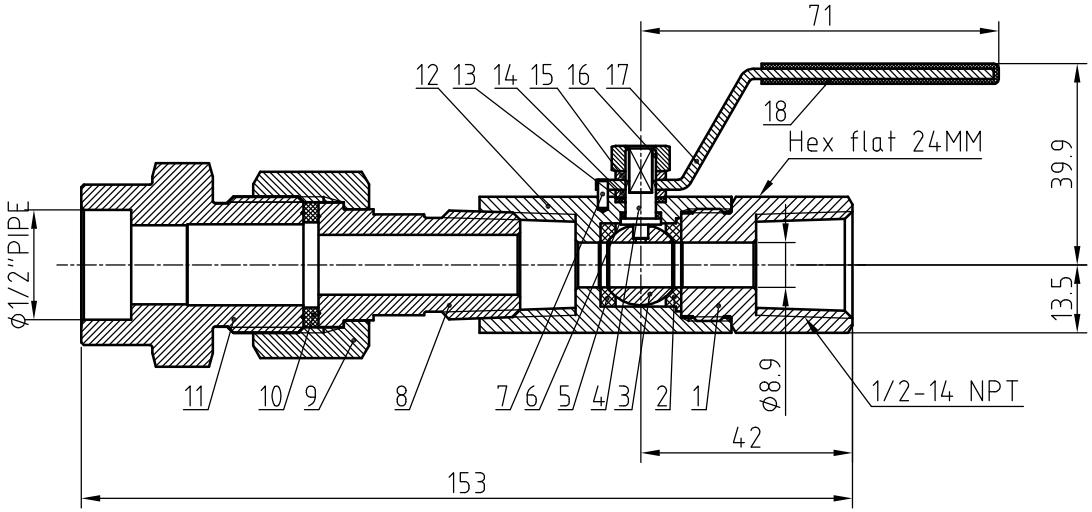

IDX	Component	Materials
1	End Connection	316 L/A479
2	Rear valve seat	PTFE
3	Ball	316 L/A479
4	Stem	316 L/A479
5	Front valve seat	PTFE
6	Lower Packing	PTFE
7	Stop Pin	Stainless steel
8	Male Connector	316 L/A479
9	Nut	316 L/A479
10	Washer	Cu
11	Male Connector	316 L/A479
12	Body	316 L/A479
13	Upper Packing	PTFE
14	Washer	316 L/A479
15	Gasket	Stainless steel
16	Stem Nut	Stainless steel
17	Handle	Stainless steel
18	Sleeve	PVC

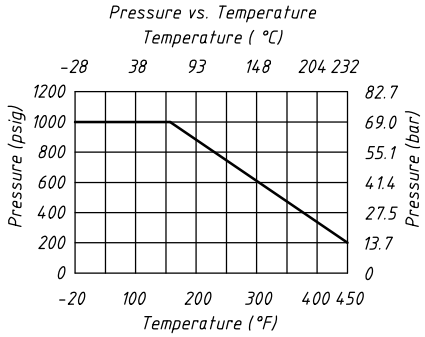

NOTE:Dimensions for reference only.

Linear unit of size: mm			Ball Valve				HTA-ПРОМ ТЕХНОЛОГИИ РЕШЕНИЯ СЕРВИС
	signature	date					
design			versions	1	proportion	1:1.5	BVN5-2C-SWF-8P8N-S
audit							
ratify					Page 1/1		