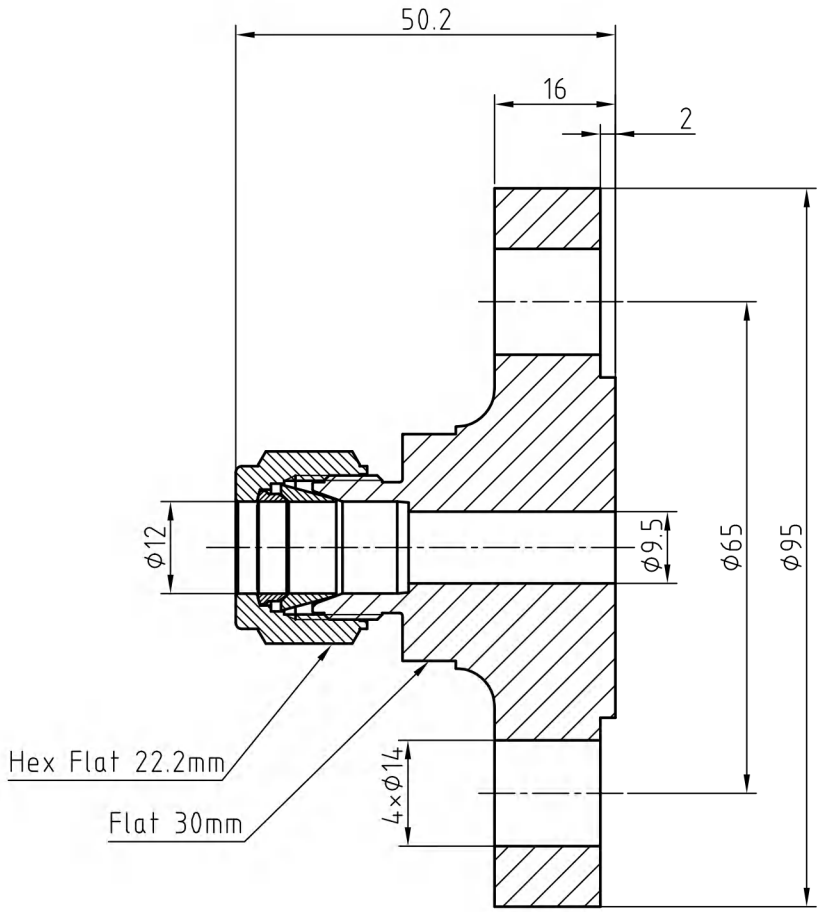

NOTE:
1.Dimensions for reference only.
2.End connettion according as EN1092-1 2002
DN15 PN16 Type B1 EN Flange.

Linear unit of size: mm		
	signature	date
design		
audit		
ratify		

Flang Adapter

НТА-ПРОМ
ТЕХНОЛОГИИ РЕШЕНИЯ СЕРВИС

versions	1	proportion	1:1
		Page 1/1	

FNF-12MF15M-16-SA