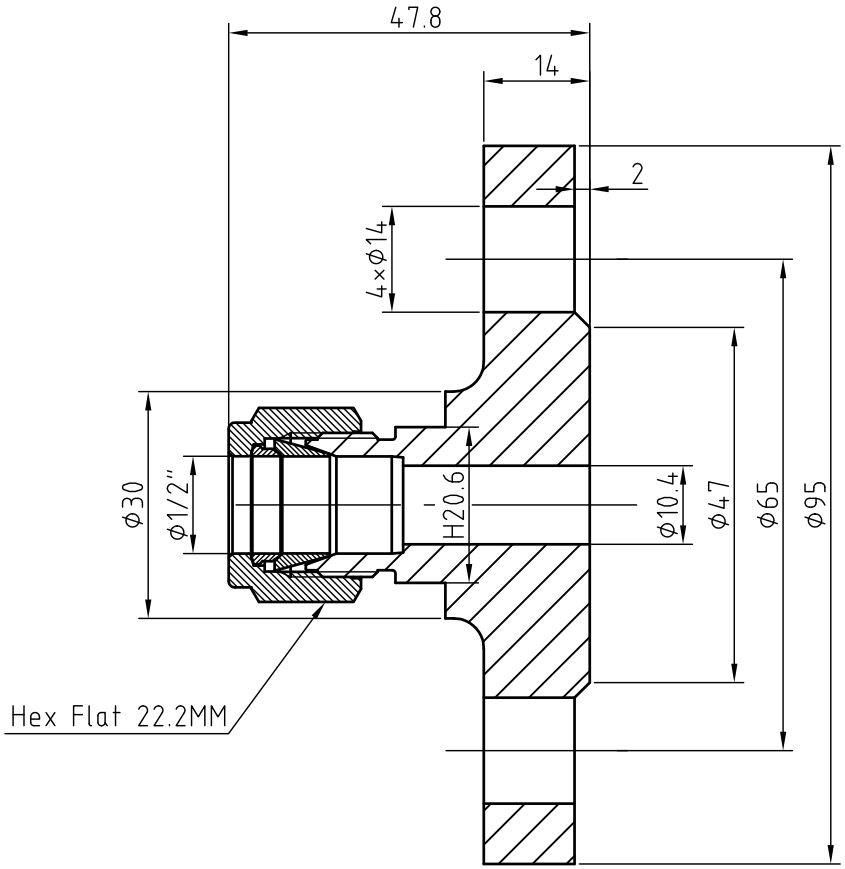

NOTE:

1.Dimensions for reference only.

2.End connettion according as GOST 33259-2015 DN15 PN16 Type B Flange;

Linear unit of size: mm		
	signature	date
design		
audit		
ratify		

Адаптер фланцевый

НТА-ПРОМ
ТЕХНОЛОГИИ РЕШЕНИЯ СЕРВИС

versions	1	proportion	1:1
		Page 1/1	

FNF-8TF15M-16GB-SA