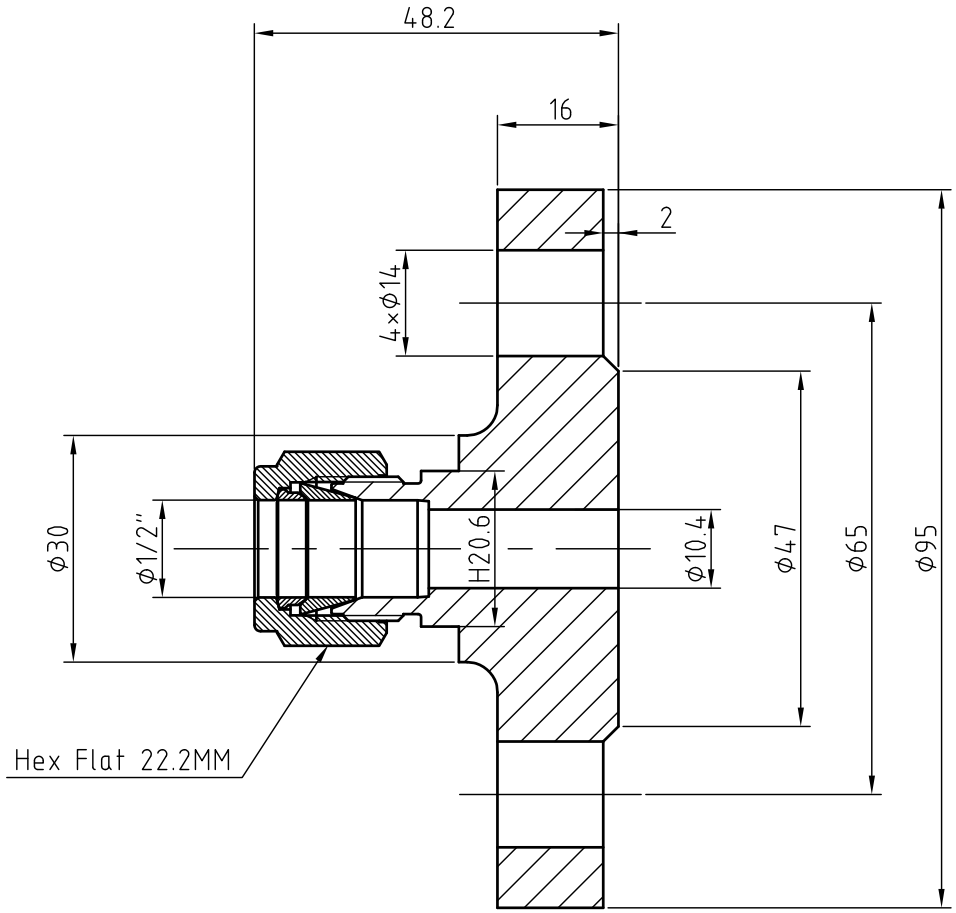

NOTE:

1.Dimensions for reference only.

2.End connettion according as GOST 33259-2015 DN15 PN40 Type B Flange;

Linear unit of size: mm			Адаптер фланцевый				НТА-ПРОМ ТЕХНОЛОГИИ РЕШЕНИЯ СЕРВИС
	signature	date					
design			versions	1	proportion	1:1	FNF-8TF15M-40GB-SA
audit							
ratify					Page 1/1		