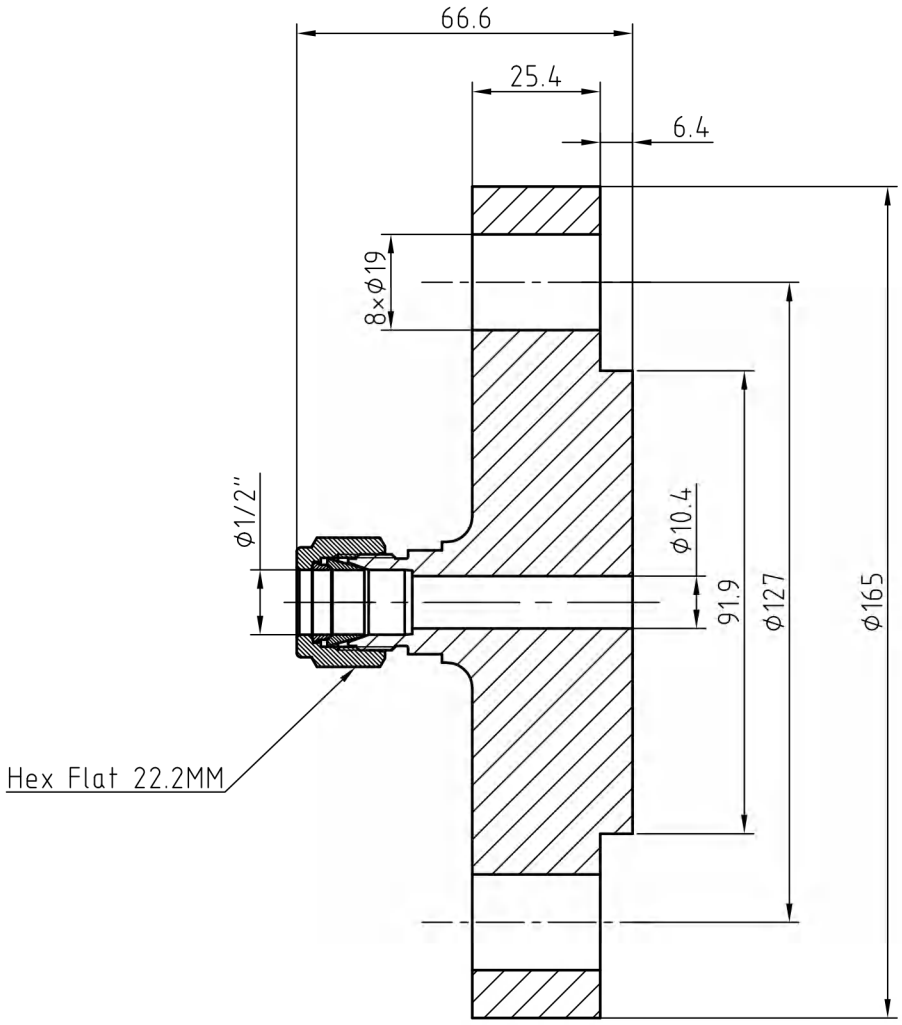

NOTE:

1.Dimensions for reference only.

2.End connettion according as ASME B16.5-2025 CLASS600 2'' RF Flange.

Linear unit of size: mm			Flange Adapter			НТА-ПРОМ ТЕХНОЛОГИИ РЕШЕНИЯ СЕРВИС
	signature	date				
design			versions	1	proportion 1:1.5	FNF-8TF32-600-SA
audit						
ratify					Page 1/1	