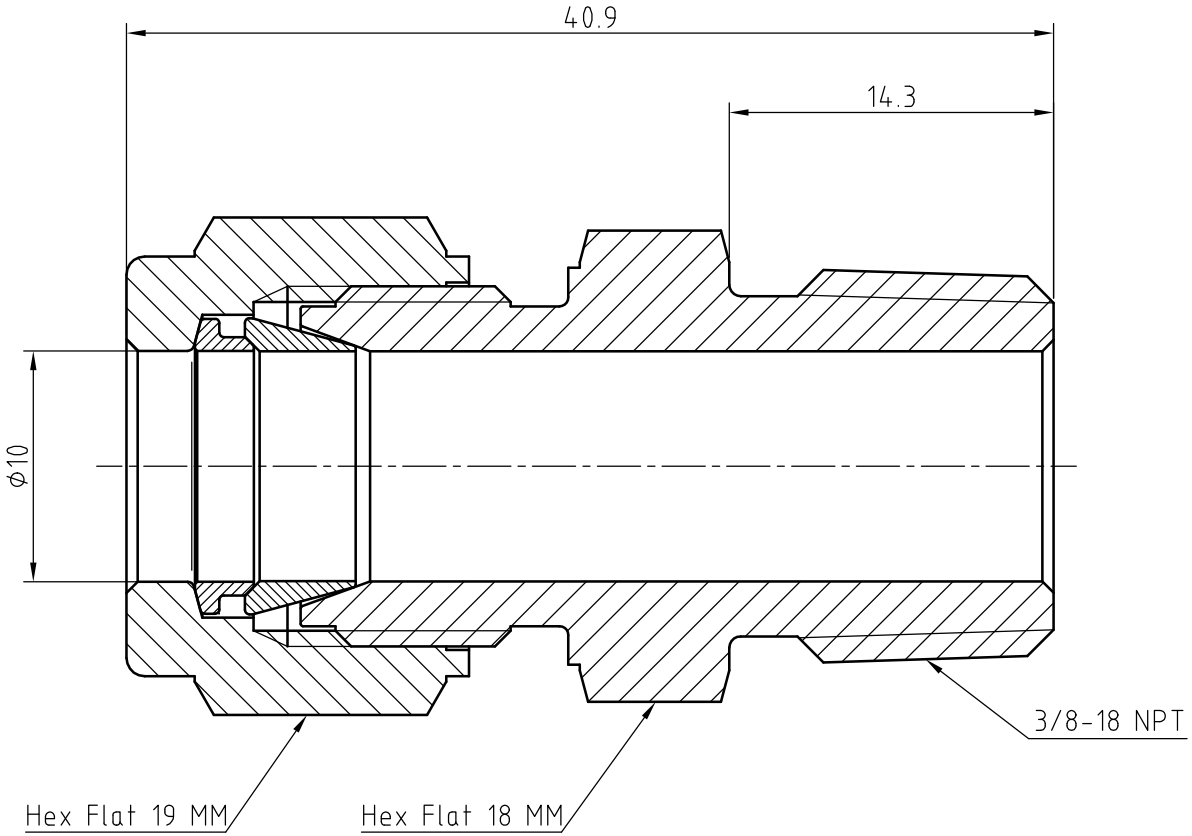

NOTE:Dimensions for reference only;

Linear unit of size: mm			Thermocouple Connector				НТА-ПРОМ ТЕХНОЛОГИИ РЕШЕНИЯ СЕРВИС
	signature	date					
design			versions	1	proportion	3:1	FNMCT10M-6N-SA
audit							
ratify					Page 1/1		