Valve Features	
Maximum working pressure	750 psig
Working temperature	-17°C~260°C
Orifice	9.5mm
Cv	1.5

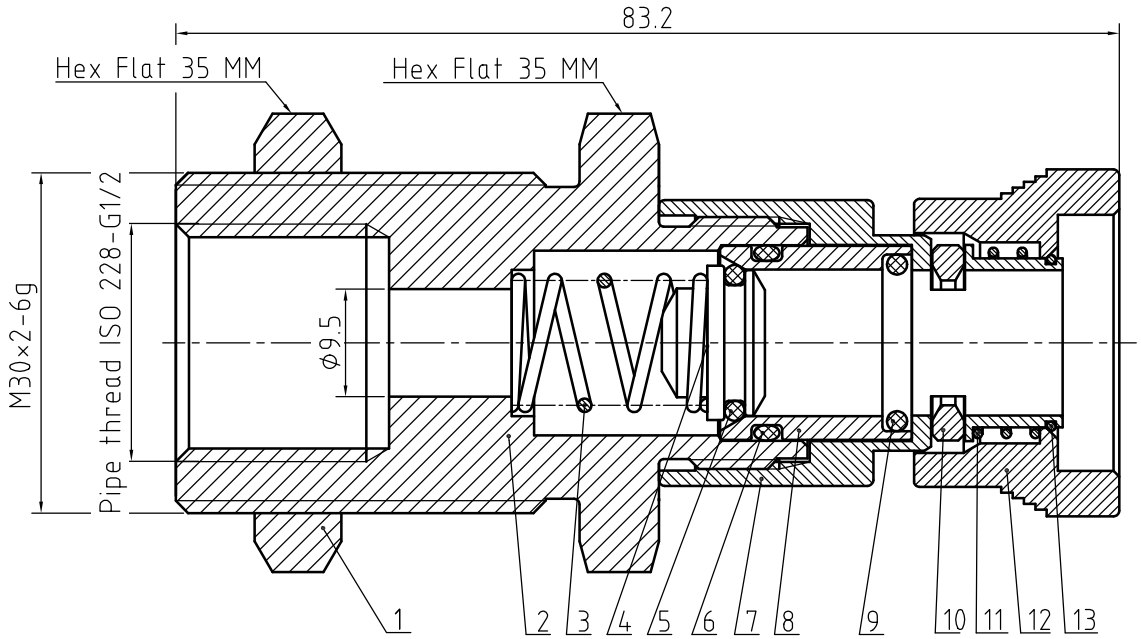

IDX	Component	Material
1	Panel Nut	316 L / A479
2	Body	316 L / A479
3	Spring	316 L / A313
4	Plug	316 L / A479
5	O-ring	FFKM
6	O-ring	FFKM
7	Housing	316 L / A479
8	Sliding sleeve	316 L / A479
9	O-ring	FFKM
10	Locking dog	Xylan-coated 316 powdered metal
11	Spring	316 L / A313
12	Body sleeve	316 L / A479
13	Snap ring	316 L / A313

NOTE:Dimensions for reference only.

Linear unit of size: mm			Quick Connect Body	НТА-ПРОМ ТЕХНОЛОГИИ РЕШЕНИЯ СЕРВИС
	signature	date		
design			versions 1	proportion 1.5:1
audit				QCN1BC-BH-F-8GG-OC-S
ratify			Page 1/1	