Valve Features	
Maximum working pressure	1500 psig
Working temperature	-198°C~454°C
Orifice	6.2mm
cv	1.0

IDX	Designation	Materials
1	Nut	316L/A479
2	Rear Ferrules	316L/A479
3	Front Ferrules	316L/A479
4	Stem	316L/A479
5	Springs	316L/A313
6	Stem Sleeve	316L/A479
7	Snap Rings	316L/A313
8	Stem Insert	316L/A240

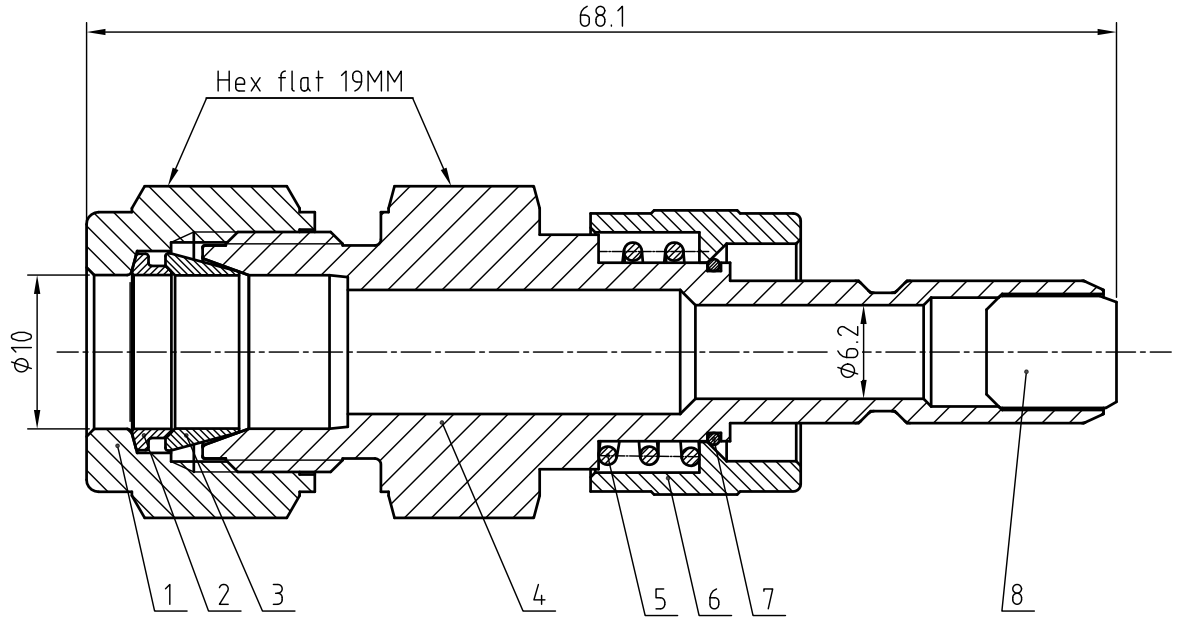

NOTE: Dimensions for reference only.

Linear unit of size: mm			Quick Connect Stem	НТА-ПРОМ ТЕХНОЛОГИИ РЕШЕНИЯ СЕРВИС
	signature	date		
design			versions 1	proportion 2:1
audit				
ratify			Page 1/1	QCN1SB-D-10M-SA