Valve Features	
Maximum working pressure	750psig
Working temperature	-198℃~454℃
Orifice	7.8mm
CV	1.3

IDX	Component	Materials
1	Panel Nut	316L/A479
2	Stem	316 L/A479
3	Springs	316 L/A313
4	Stem sleeve	316 L/A479
5	Snap rings	316 L/A479
6	Stem Tip	316 L/A479

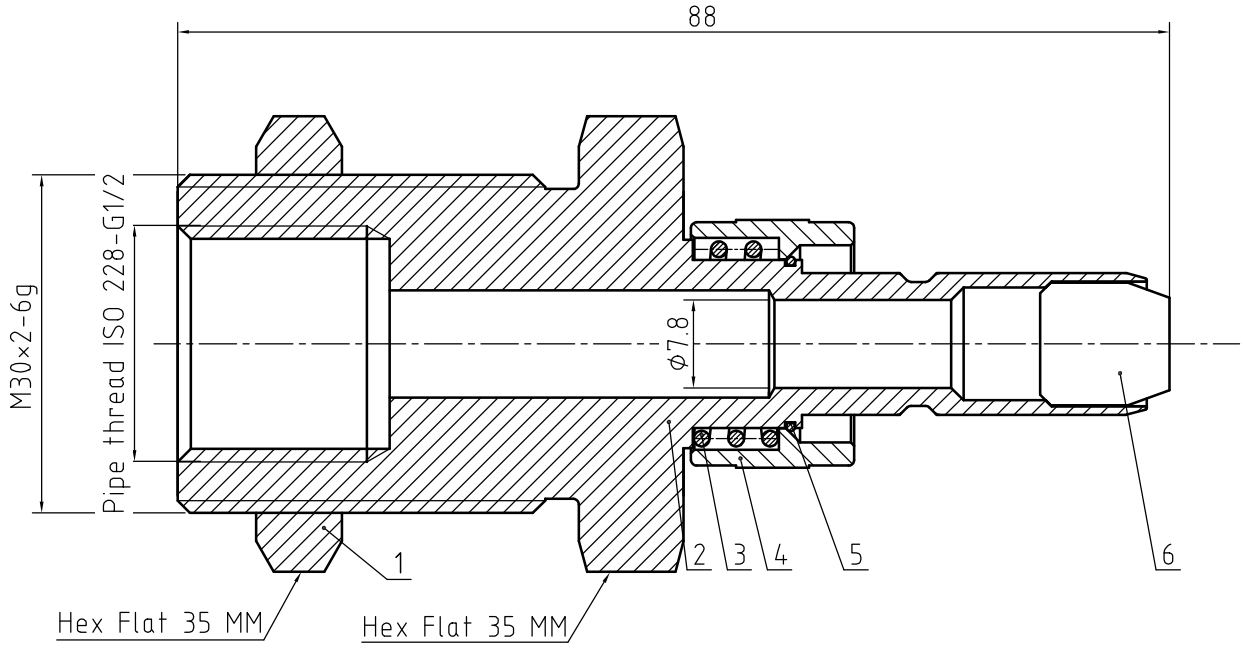

NOTE:Dimensions for reference only.

Linear unit of size: mm			Quick-connect stem				НТА-ПРОМ ТЕХНОЛОГИИ РЕШЕНИЯ СЕРВИС
	signature	date					
design			versions	1	proportion	1.5:1	QCN1SC-BH-F-8GG-OC-S
audit							
ratify					Page 1/1		