Valve Features	
Maximum working pressure	2500psig
Working temperature	-54℃~148℃
Orifice	3.2mm
CV	0.35

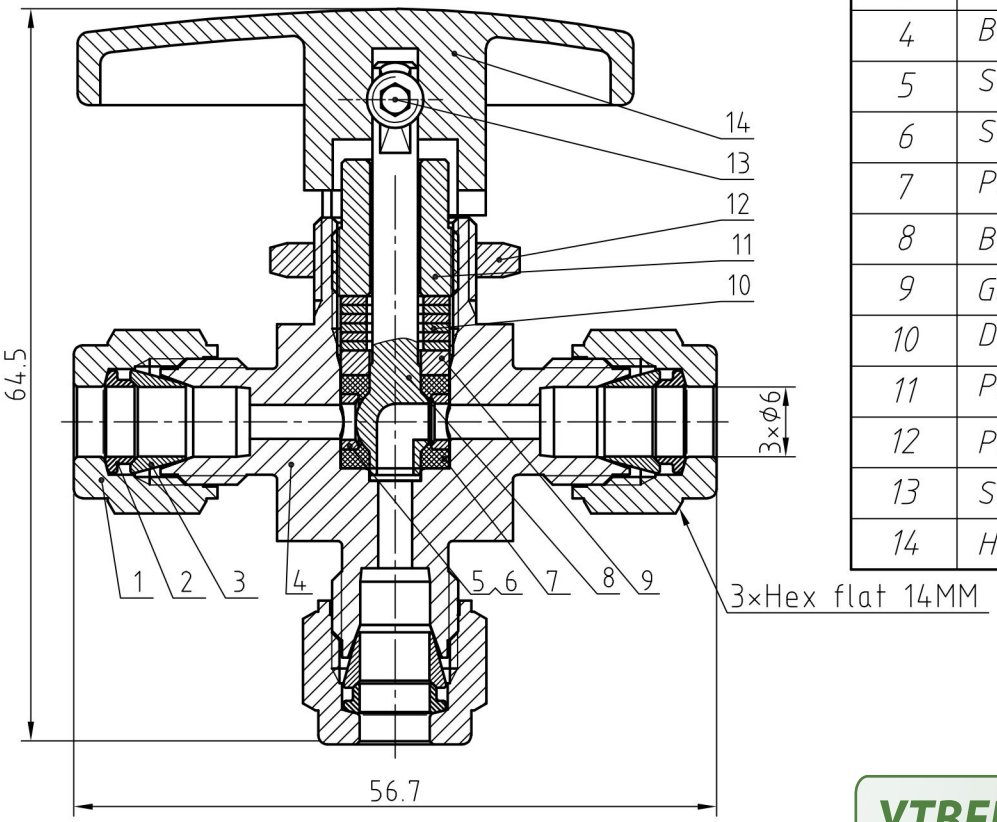

Item	Component	Material
1	Nut	316L/ASTM A479
2	Rear Ferrules	316L/ASTM A479
3	Front Ferrules	316L/ASTM A479
4	Body	316L/ASTM A479
5	Support Ring	316L/ASTM A479
6	Support Disc	316L/ASTM A479
7	Packing Seat	PFA/D3307
8	Ball Stem	316L/ASTM A479
9	Gland	316L/ASTM A479
10	Disc Spring	S17700
11	Packing Bolt	316L/ASTM A479
12	Panel Nut	316L/ASTM A479
13	Set Screw	Carbon Steel
14	Handle	316/ASTM A479

Pressure vs. Temperature

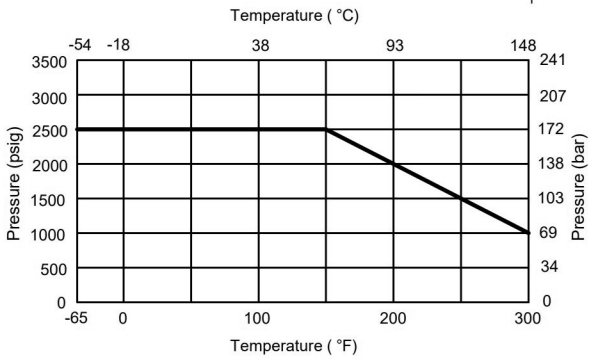

NOTE:Dimensions for reference only.

УТВЕРЖДЕНО

Вячеслав Перепелкин 16:05, 5/8/25

Linear unit of size: mm			Ball valve				НТА-ПРОМ ТЕХНОЛОГИИ РЕШЕНИЯ СЕРВИС
	signature	date					
design			versions	1	proportion	1.5:1	BVN1-2A-3B-D-6M-PF-S
audit							
ratify					Page 1/1		