Valve Features	
Maximum working pressure	2500psig (172bar)
Working temperature	-54℃~148℃
Orifice	0.091in. (2.4mm)
cv	0.20

Item	Component	Material
1	Nut	316L/A479
2	Rear Ferrule	316L/A479
3	Front Ferrule	316L/A479
4	Body	316L/A479-NACE
5	Support Ring	316L/A479-NACE
6	Support Disc	316L/A479-NACE
7	Packing Seat	PFA
8	Ball Stem	316L/A479-NACE
9	Gland	316L/A479
10	Disc Spring	S17700
11	Packing Bolt	316L/A479
12	Panel Nut	316L/A479
13	Set Screw	Carbon Steel
14	Handle	Nylon

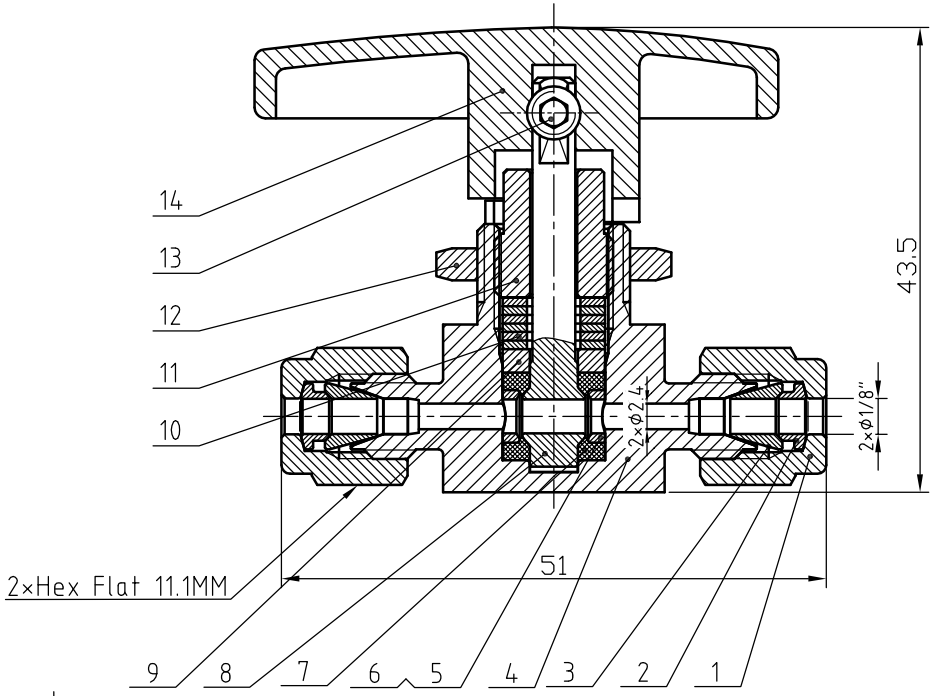

Pressure vs. Temperature

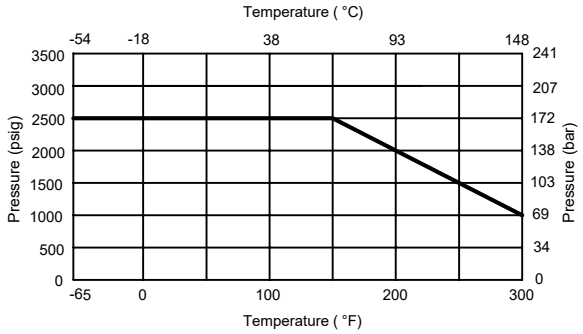

NOTE:Dimensions for reference only.

Linear unit of size: mm			Ball valve				НТА-ПРОМ ТЕХНОЛОГИИ РЕШЕНИЯ СЕРВИС
	signature	date					
design			versions	1	proportion	1.5:1	BVN1-2A-D-2T-PF-SG-S
audit							
ratify					Page 1/1		