Valve Features	
Maximum working pressure	2500psig (172bar)
Working temperature	-54℃~148℃
Orifice	0.09in. (2.4mm)
cv	0.20

Item	Component	Material
1	Nut Hex	316L / A479
2	Rear Ferrules	316L / A479
3	Front Ferrules	316L / A479
4	Body	316L / A479
5	Support Ring	316L / A479
6	Support Disc	316L / A479
7	Packing Seat	PFA/D3307
8	Ball Stem	316L / A479
9	Gland	316L / A479
10	Disc Spring	S17700
11	Packing Bolt	316L / A479
12	Panel Nut	316L / A479
13	Set Screw	Carbon Steel
14	Handle	Nylon

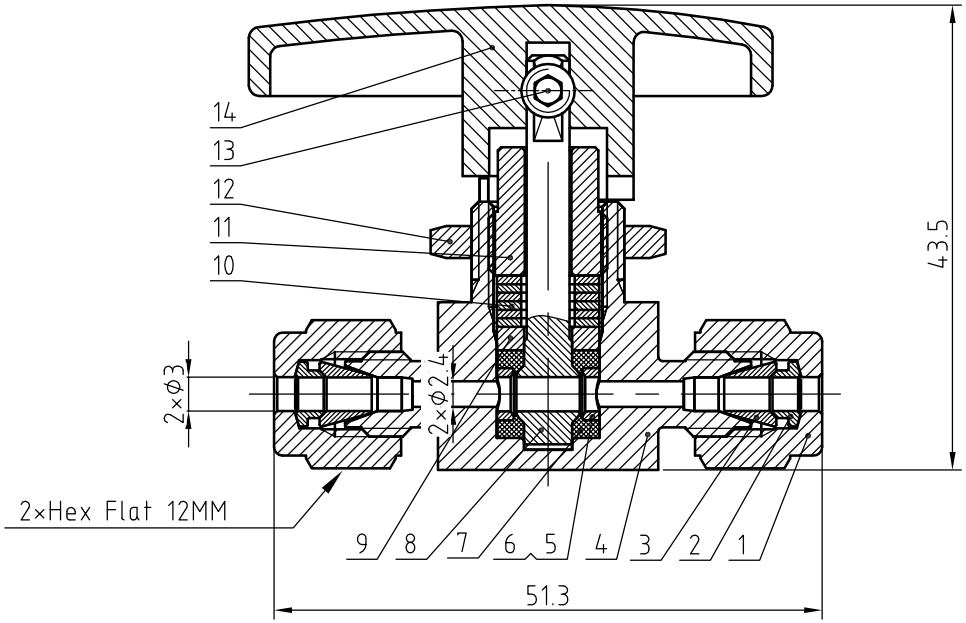

Pressure vs. Temperature

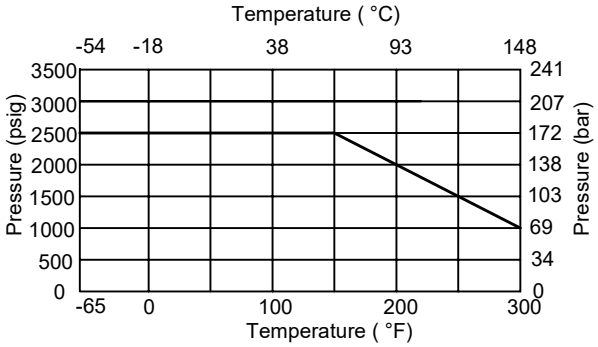

NOTE:Dimensions for reference only.

Linear unit of size: mm			Ball valve				НТА-ПРОМ ТЕХНОЛОГИИ РЕШЕНИЯ СЕРВИС
	signature	date					
design			versions	1	proportion	1.5:1	BVN1-2A-D-3M-PF-S
audit	✓	12.08.25					
ratify					Page 1/1		