Valve Features	
Maximum working pressure	2500psig (172bar)
Working temperature	-28℃~148℃
Orifice	0.19in. (4.8mm)
cv	0.75

Item	Component	Material
1	Body	316L/A479
2	Support Ring	316L/A479
3	Support Disc	316L/A479
4	Packing Seat	PTFE
5	Gland	316L/A479
6	Disc Spring	S17700
7	Packing Bolt	316L/A479
8	Panel Nut	316L/A479
9	Set Screw	Carbon Steel
10	Handle	Nylon

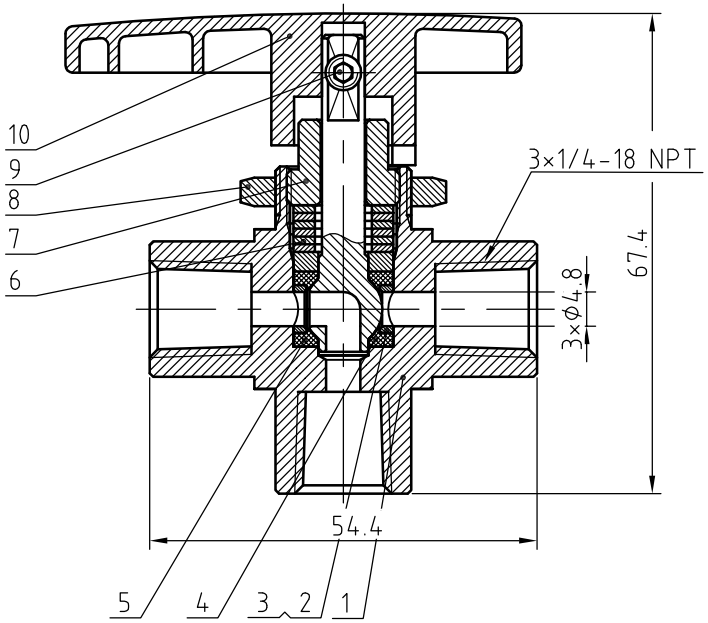

Pressure vs. Temperature

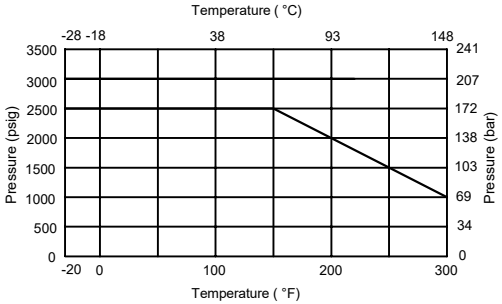

NOTE:Dimensions for reference only.

Linear unit of size: mm			Ball valve				НТА-ПРОМ ТЕХНОЛОГИИ РЕШЕНИЯ СЕРВИС
	signature	date					
design			versions	1	proportion	1:1	BVN1-2B-3B-F-4N-S
audit							
ratify					Page 1/1		