Valve Features	
Maximum working pressure	3000psig (207bar)
Working temperature	-54℃~148℃
Orifice	0.19in. (4.8mm)
cv	1.4

Item	Component	Material
1	Nut	316SS/A479
2	Rear Ferrule	316SS/A479
3	Front Ferrule	316SS/A479
4	Body	316SS/A479
5	Support Ring	316SS/A479
6	Support Disc	316SS/A479
7	Packing Seat	PFA/D3307
8	Ball Stem	316SS/A479
9	Gland	316SS/A479
10	Disc Spring	S17700
11	Packing Bolt	316SS/A479
12	Panel Nut	316SS/A479
13	Set Screw	CarbonSteel
14	Handle	Nylon

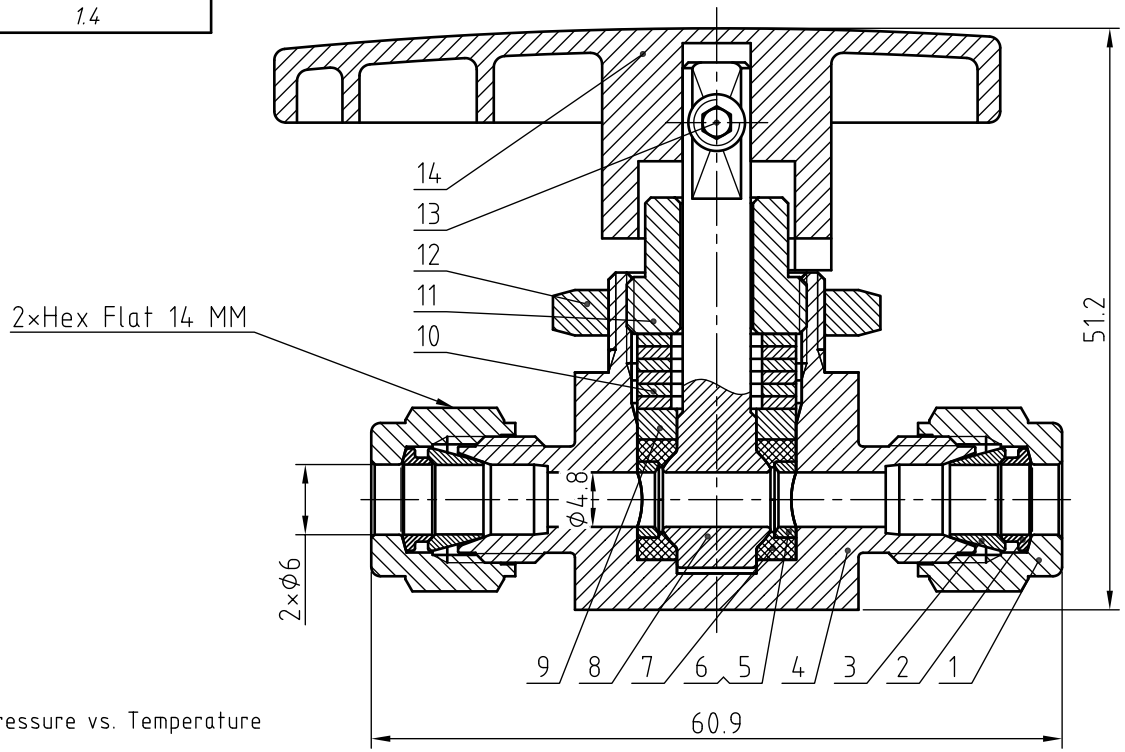

Pressure vs. Temperature

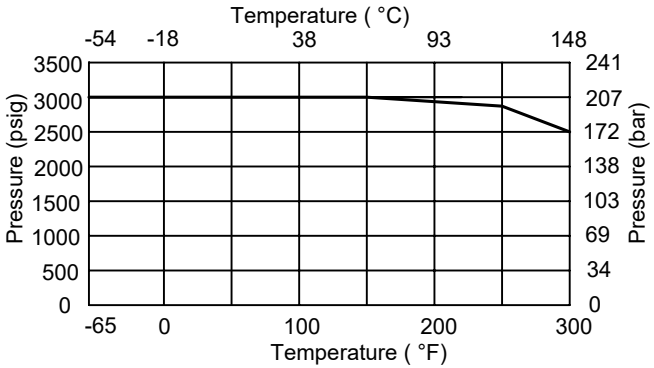

NOTE:Dimensions for reference only.

Linear unit of size: mm			Ball valve				HTA-ПРОМ ТЕХНОЛОГИИ РЕШЕНИЯ СЕРВИС
	signature	date					
design			versions	1	proportion	1.5:1	BVN1-2B-D-6M-PF-S
audit							
ratify					Page 1/1		