Valve Features	
Maximum working pressure	2500psig (172bar)
Working temperature	-54℃~148℃
Orifice	0.41in. (10.3mm)
cv	6.3

Item	Component	Material
1	Body	316L/ASTM A479
2	Support Ring	316L/ASTM A479
3	Support Disc	316L/ASTM A479
4	Packing Seat	PFA
5	Ball Stem	316L/ASTM A479
6	Gland	316L/ASTM A479
7	Disc Spring	S17700
8	Packing Bolt	316L/ASTM A479
9	Panel Nut	316L/ASTM A479
10	Set Screw	Carbon Steel
11	Handle	316L/ASTM A479

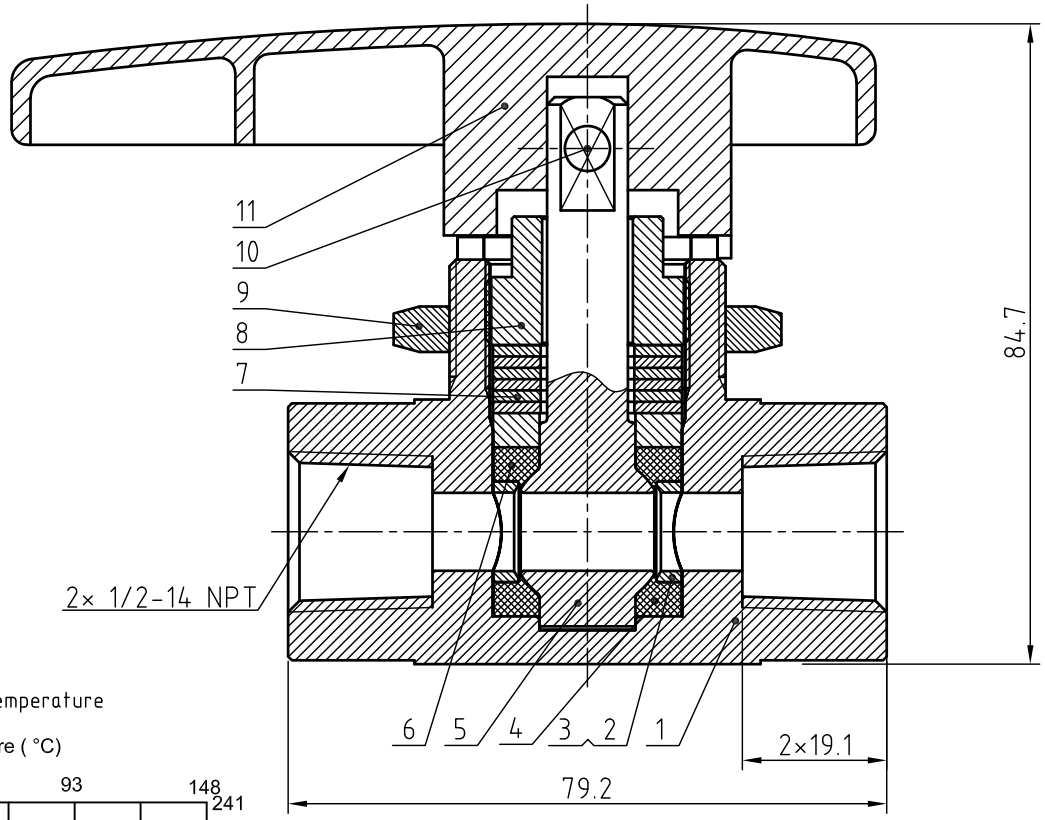

Pressure vs. Temperature

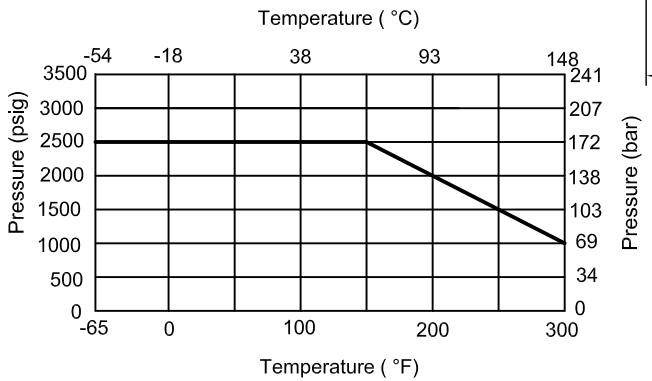

NOTE:Dimensions for reference only.

Linear unit of size: mm			Ball valve				НТА-ПРОМ ТЕХНОЛОГИИ РЕШЕНИЯ СЕРВИС
	signature	date					
design			versions	1	proportion	1:1	BVN1-2D-F-8N-PF-S
audit							
ratify					Page 1/1		