Valve Features	
Maximum working pressure	1000psig
Working temperature	-28℃~232℃
Orifice	20mm
CV	50

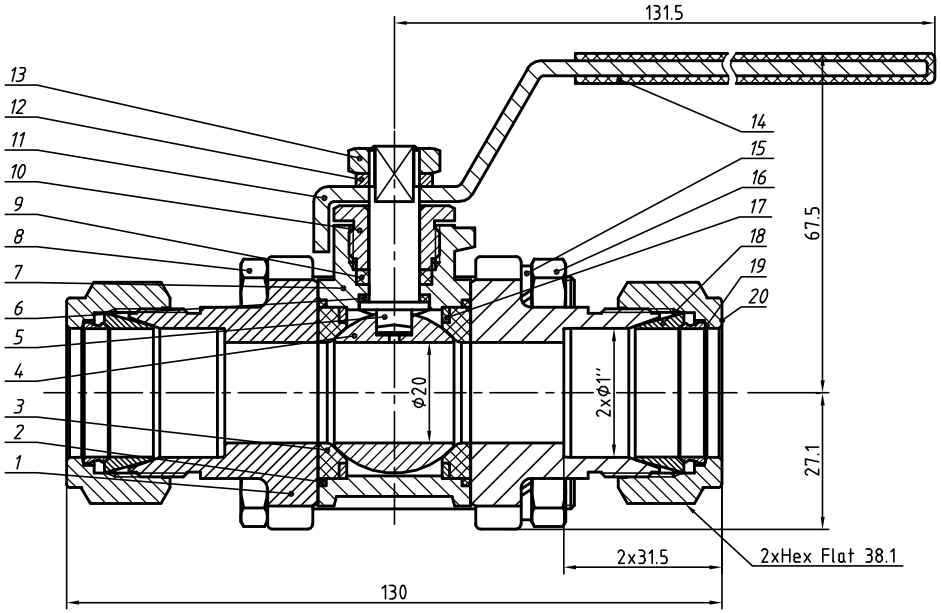

Item	Component	Material
1	End Connection	CF8M/ASTM A351
2	Flange Seal	PTFE/ASTM D1710
3	Seat	PTFE/ASTM D1710
4	Ball	316SS/ASTM A479
5	Stem	316SS/ASTM A479
6	Stem Bearing	PTFE/ASTM D1710
7	Body	CF8M/ASTM A351
8	Body Bolt	Stainless Steel
9	Stem Packing	PTFE/ASTM D1710
10	Gland	316SS/ASTM A479
11	Handle	304SS/ASTM A240
12	Gasket	Stainless Steel
13	Stem Nut	Stainless Steel
14	Handle Sleeve	Vinyl
15	Gasket	Stainless Steel
16	Nut	Stainless Steel
17	Support Ring	316SS/ASTM A240
18	Front Ferrule	316SS/ASTM A276
19	Rear Ferrule	316SS/ASTM A276
20	Nut	316SS/ASTM A276

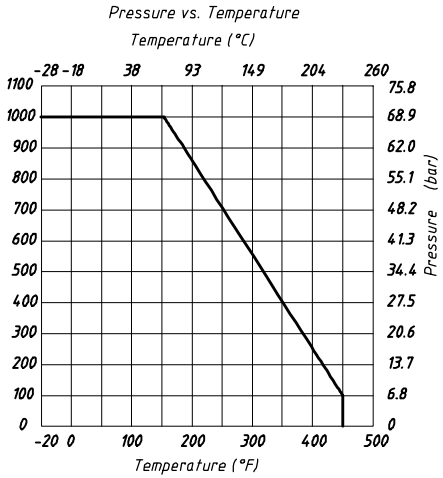

NOTE: Dimensions for reference only.

Linear unit of size: mm			Ball valve				НТА-ПРОМ ТЕХНОЛОГИИ РЕШЕНИЯ СЕРВИС
	signature	date					
design			versions	1	proportion	1:1.5	BVN2-2C-D-16T-316
audit							
ratify					Page 1/1		