Valve Features	
Maximum working pressure	1000 psig
Working temperature	-20°C~100°C
Orifice	15mm
CV	10

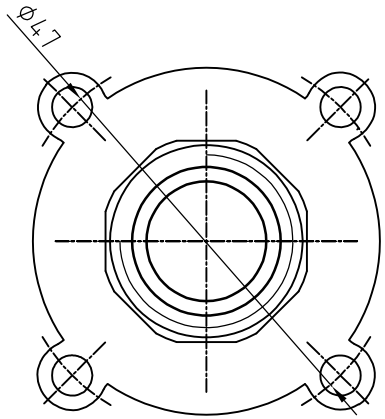

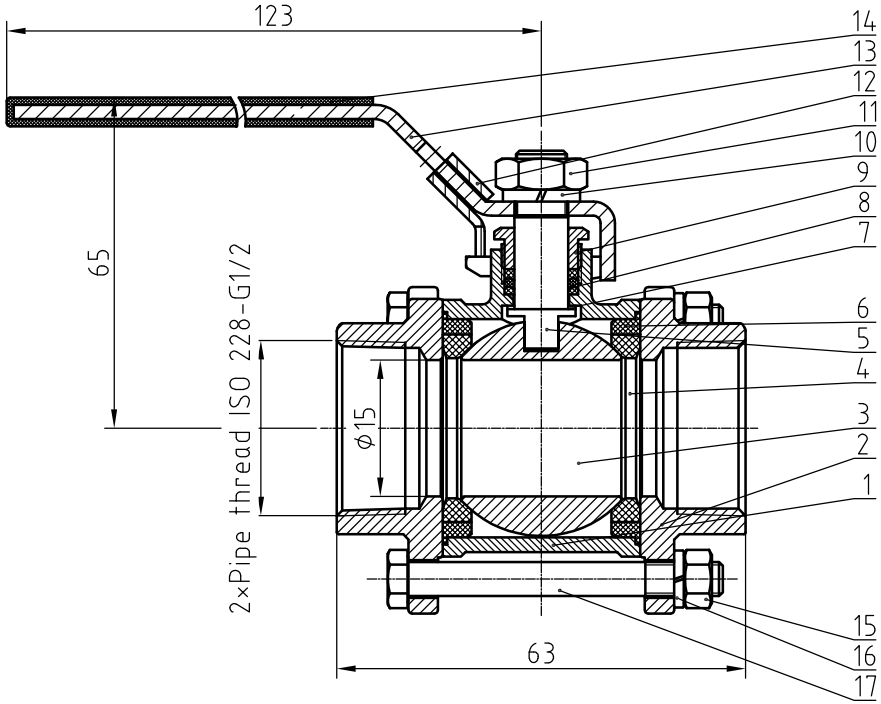

Item	Component	Material
1	BODY	CF3M
2	CAP	CF3M
3	BALL	CF3M
4	SEAT	PTFE
5	STEM	SUS316
6	GASKET	PTFE
7	THRUST WASHER	PTFE
8	PACKING	PTFE
9	GLAND	SUS304
10	SPRING WASHER	SUS304
11	STEM NUT	SUS304
12	LOCKING DEVICE	SUS304
13	HANDLE	SUS304
14	PLASTIC COVER	PLASTIC
15	HEX NUT	SUA304
14	BOLT WASHER	SUA304
15	JOINT BOLT	SUA304

NOTE:Dimensions for reference only.

Linear unit of size: mm			Ball valve				НТА-ПРОМ ТЕХНОЛОГИИ РЕШЕНИЯ СЕРВИС
	signature	date					
design			versions	1	proportion	1:1	BVN2-2C-F-8GR-316
audit							
ratify					Page 1/1		