Valve Features	
Maximum working pressure	2500 psig
Working temperature	-28°C~232°C
Orifice	4.8mm

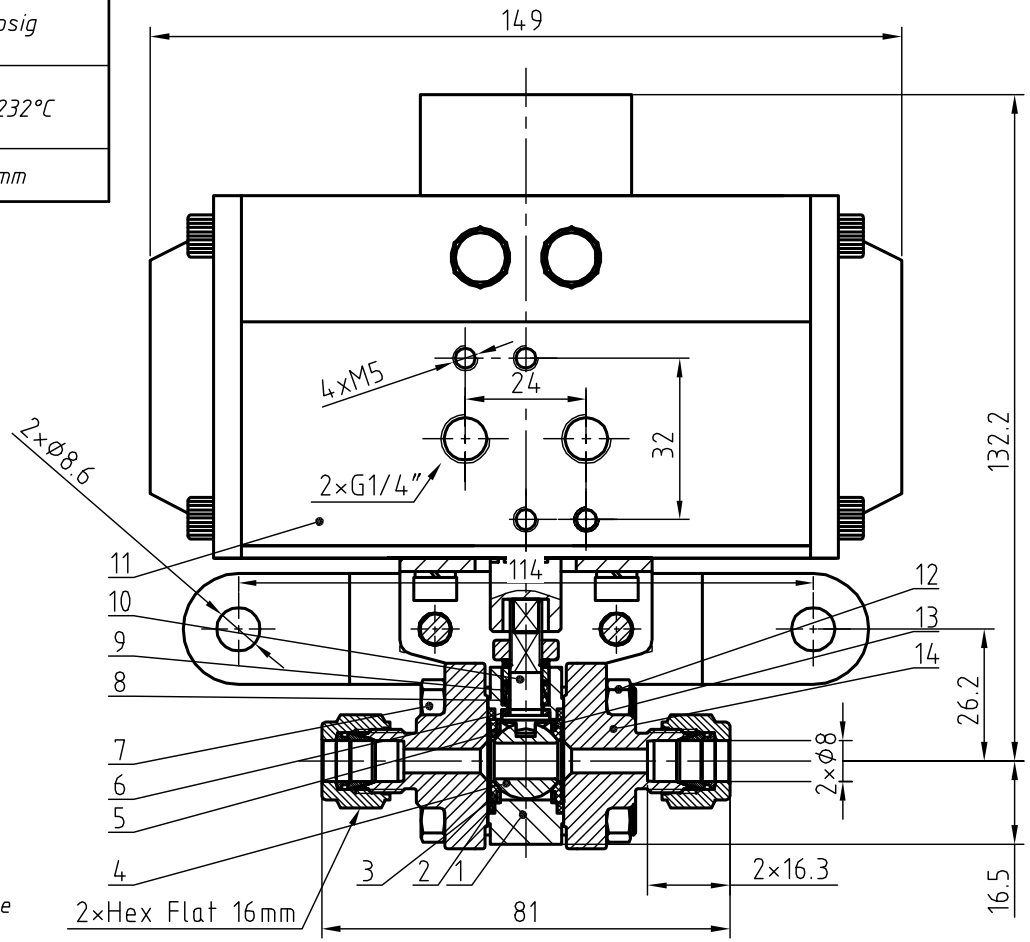

Item	Component	Material
1	Body	CF3M
2	Flange Seal	PTFE
3	Seat	Reinforced PTFE
4	Coned-disc Spring	Stain-hardened 316
5	Ball	316L
6	Stem Bearing	PEEK
7	Body Bolt	316L
8	Lower Packing	Reinforced PTFE
9	Upper Packing	Reinforced PTFE
10	Stem	2507
11	Actuator	Main Aluminium Alloy
12	Body Nut	316
13	Support Ring	316L
14	End Connection	CF3M

Pressure vs. Temperature

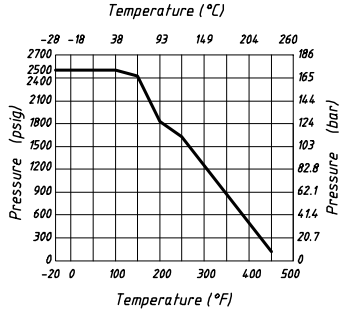

Notes:

1.Dimensions for reference only.

2.Pneumatic Actuator:

a.Working Temperature: -15~80℃;

b.Pressure of air supply: 6 bar.

Linear unit of size: mm			Ball Valve				НТА-ПРОМ ТЕХНОЛОГИИ РЕШЕНИЯ СЕРВИС
	signature	date					
design			versions	1	proportion	1:1	BVN3-2A-D-8M-RP-QD-S
audit							
ratify					Page 1/1		