Valve Features	
Maximum working pressure	2000psig
Working temperature	-20℃~100℃
Orifice	15mm
CV	10

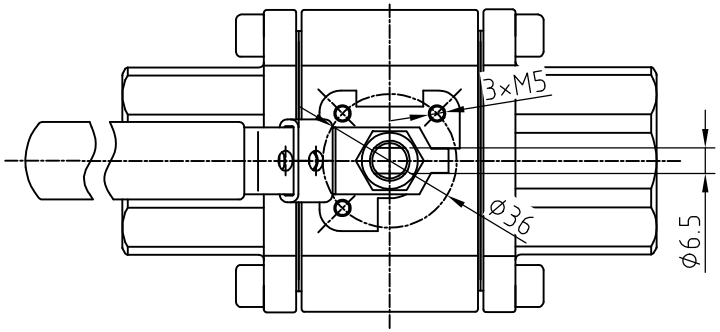

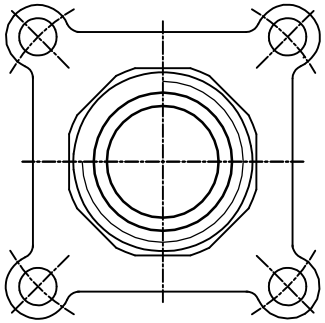

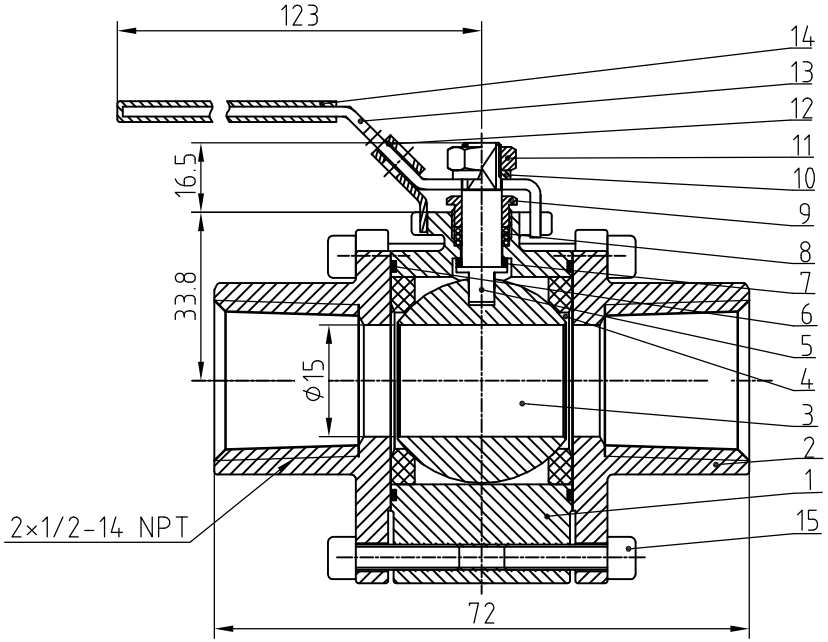

Item	Component	Material
1	BODY	CF8M
2	CAP	CF8M
3	BALL	CF8M
4	SEAT	PTFE
5	STEM	SUS316
6	GASKET	PTFE
7	THRUST WASHER	PTFE
8	PACKING	GRAPHITE
9	GLAND	SUS304
10	SPRING WASHER	SUS304
11	STEM NUT	SUS304
12	LOCKING DEVICE	SUS304
13	HANDLE	SUS304
14	PLASTIC COVER	PLASTIC
15	BOLT	B8M

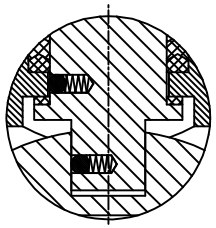

Anti-static device

NOTE:Dimensions for reference only.

Linear unit of size: mm			Ball valve				НТА-ПРОМ ТЕХНОЛОГИИ РЕШЕНИЯ СЕРВИС
	signature	date					
design			versions	1	proportion	1:1	BVN3-2B-F-8N-316
audit	✓	29.09.2025					
ratify					Page 1/1		