Valve Features	
Maximum working pressure	2500psig
Working temperature	-28℃~232℃
Orifice	10.4mm
CV	7.5

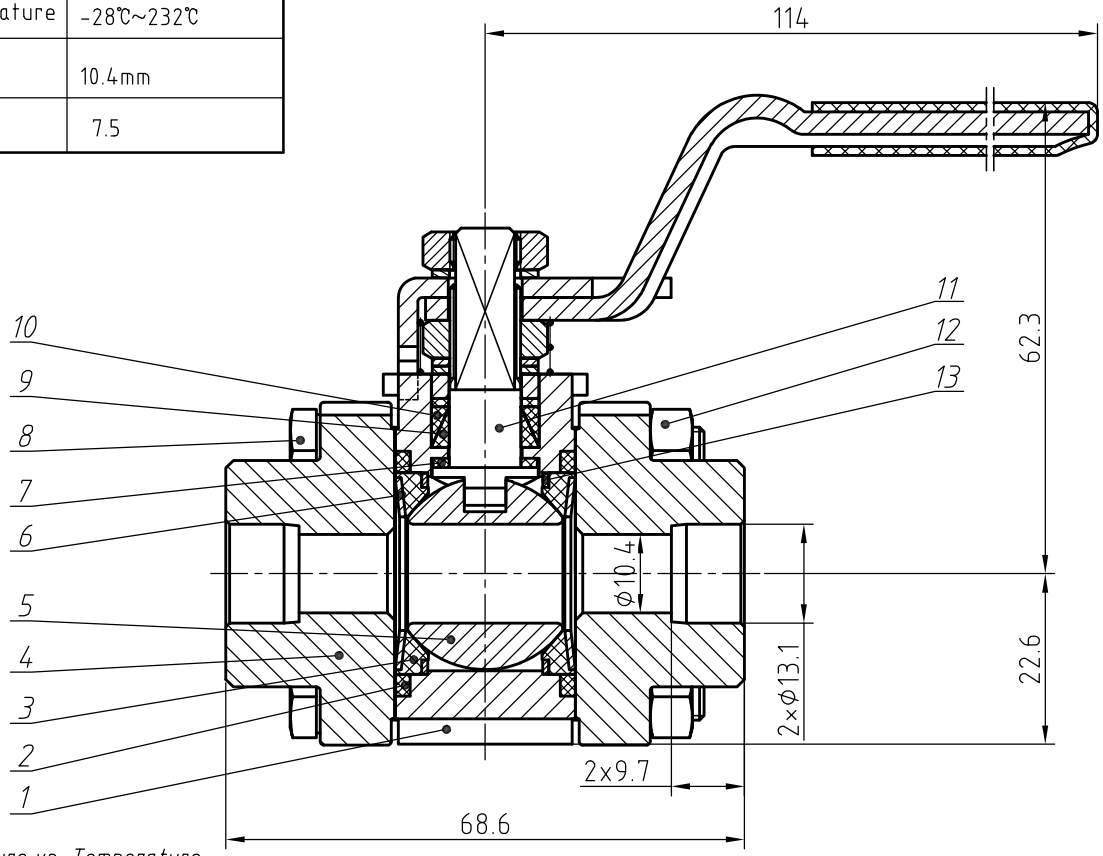

Item	Component	Material
1	Body	316SS/A479
2	Flange Seal	PTFE
3	Seat	Reinforced PTFE
4	End Connection	316SS/A479
5	Ball	316SS/A479
6	Coned-disc Spring	Stain-hardened 316
7	Stem Bearing	PEEK
8	Body Bolt	316SS/A479
9	Lower Packing	Reinforced PTFE
10	Upper Packing	Reinforced PTFE
11	Stem	316SS/A479
12	Body Nut	316SS/A479
13	Support Ring	316SS/A479

Pressure vs. Temperature

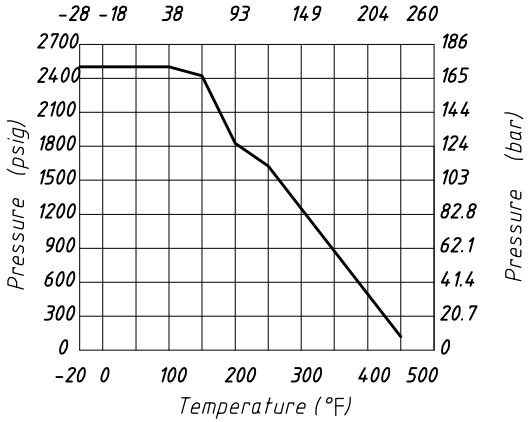

NOTE:Dimensions for reference only.

Linear unit of size: mm			Ball Valve				НТА-ПРОМ ТЕХНОЛОГИИ РЕШЕНИЯ СЕРВИС
	signature	date					
design			versions	1	proportion	1:1	BVN3-2B-SW-8T-RP-S
audit							
ratify					Page 1/1		