| Valve Features | |
|---|---|
| Maximum working pressure | 1000psig |
| Working temperature | -28℃~232℃ |
| Orifice | 13.1mm |
| CV | 5.0 |

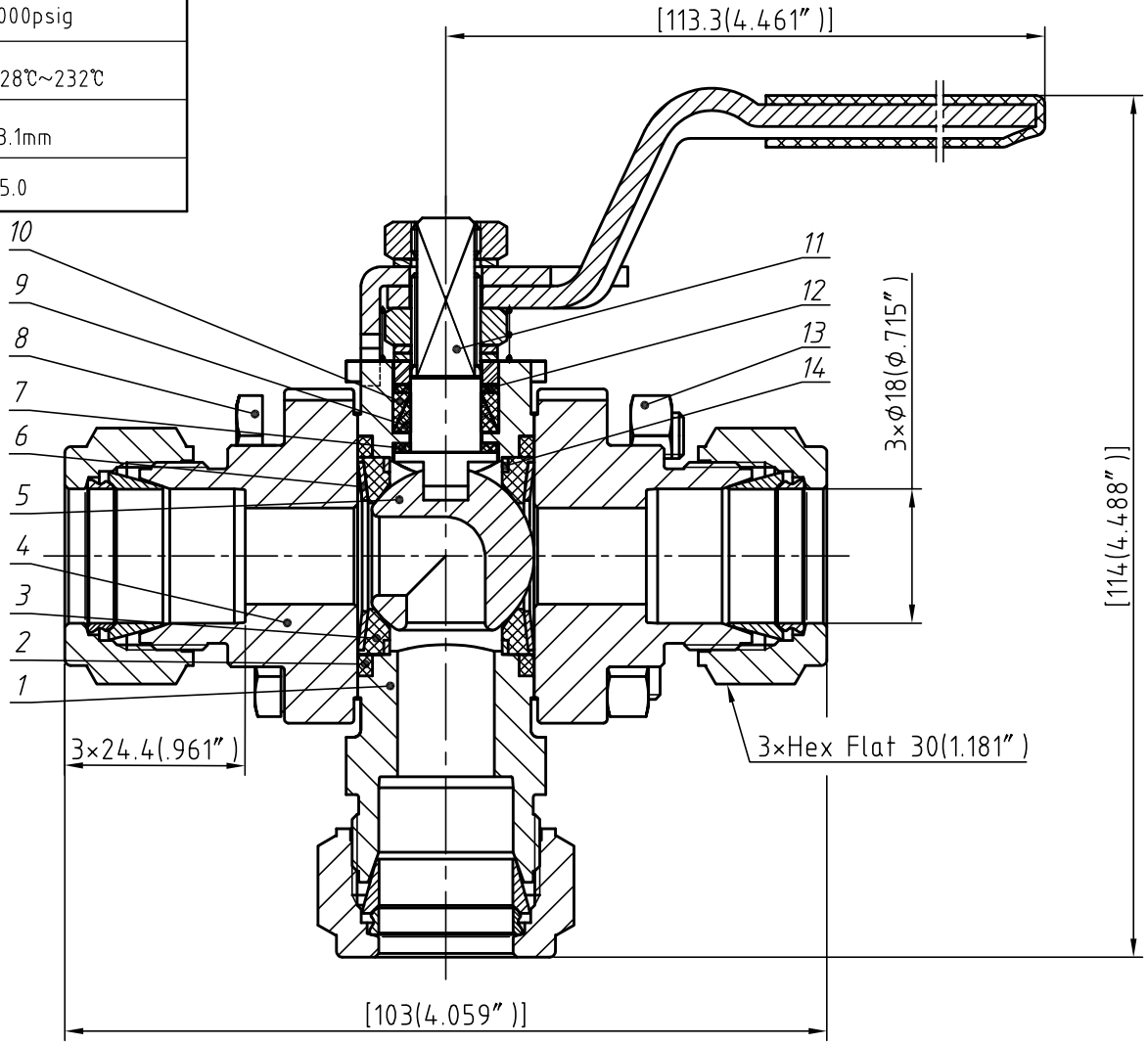


| Item | Component | Material |
|---|---|---|
| 1 | Body | CF8M |
| 2 | Flange Seal | PTFE |
| 3 | Seat | PTFE |
| 4 | End Connection | CF8M |
| 5 | Ball | 316SS/A479 |
| 6 | Coned-disc Spring | Stain-hardened 316 |
| 7 | Stem Bearing | PEEK |
| 8 | Body Bolt | 316SS/A479 |
| 9 | Lower Packing | Reinforced PTFE |
| 10 | Upper Packing | Reinforced PTFE |
| 11 | Stem | 316SS/A479 |
| 12 | Packing Support | PEEK |
| 13 | Body Nut | 316SS/A479 |
| 14 | Support Ring | 316SS/A479 |

## Pressure vs. Temperature

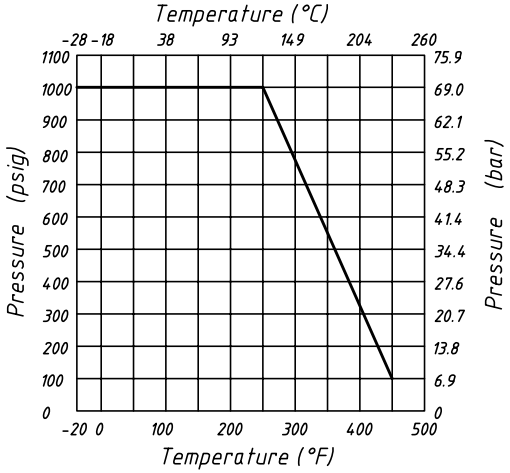


NOTE:Dimensions for reference only.

| Linear unit of size: mm | | | Ball valve | | | | HTA-ПРОМ ТЕХНОЛОГИИ РЕШЕНИЯ СЕРВИС |
|---|---|---|---|---|---|---|---|
| | signature | date | | | | | |
| design | | | versions | 1 | proportion | 1:1 | BVN3-2C-3B-D-18M-316 |
| audit | | | | | | | |
| ratify | | | | | Page 1/1 | | |