Valve Features	
Maximum working pressure	1000psig
Working temperature	-28℃~232℃
Orifice	13.1mm
CV	5.0

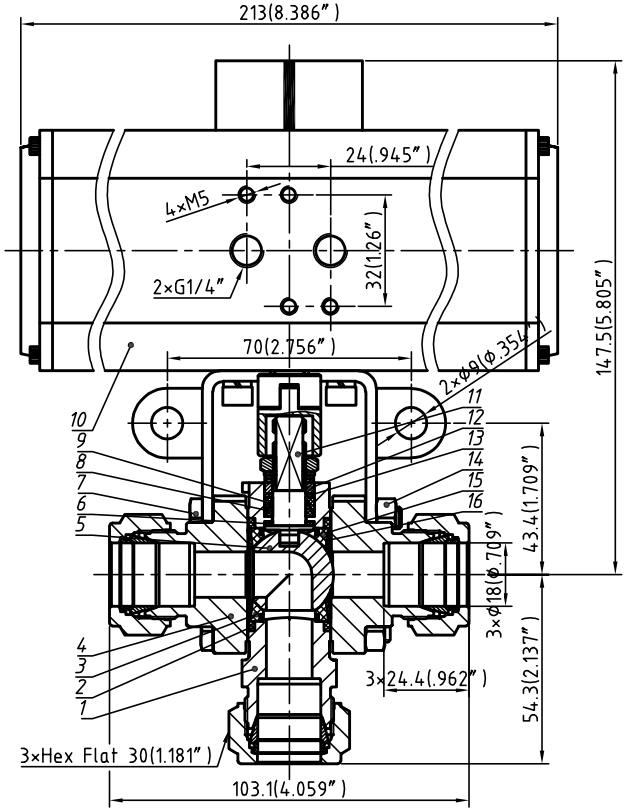

Item	Component	Material
1	Body	*CF8M*
2	Flange Seal	*PTFE*
3	Seat	*PTFE*
4	End Connection	*CF8M*
5	Ball	*316*
6	Stem Bearing	*PEEK*
7	Body Bolt	Stainless Steel
8	Lower Packing	*Reinforced PTFE*
9	Upper Packing	*Reinforced PTFE*
10	Actuator	Main Aluminium Alloy
11	Stem	*316*
12	Gland	PTFE-coated 316
13	Packing Support	*PEEK*
14	Body Nut	Stainless Steel
15	Support Ring	*316*
16	Coned-disc Spring	*Stain-hardened 316*

Pressure vs. Temperature

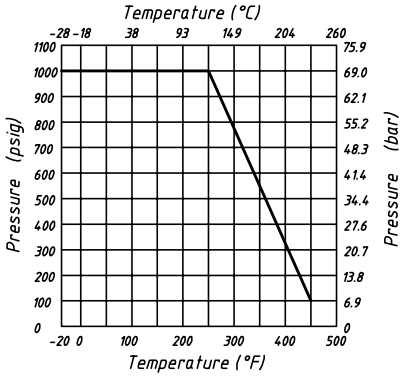

NOTES:

1.Actuator Features:

Working temperature: -20~80°C.

Pressure of air supply: 6 bar.

2.Dimensions for reference only.

3.The surface of metal part contacted with media should be Sulfinert-treated.(For the valve of Ordering Number with the -SI suffix).

Linear unit of size: mm			Ball valve				НТА-ПРОМ ТЕХНОЛОГИИ РЕШЕНИЯ СЕРВИС
	signature	date					
design			versions	1	proportion	1:3	BVN3-2C-3B-D-18M-HD-316
audit							
ratify					Page 1/1		