Valve Features	
Maximum working pressure	1500 psig
Working temperature	-40°C~177°C
Orifice	6.4mm

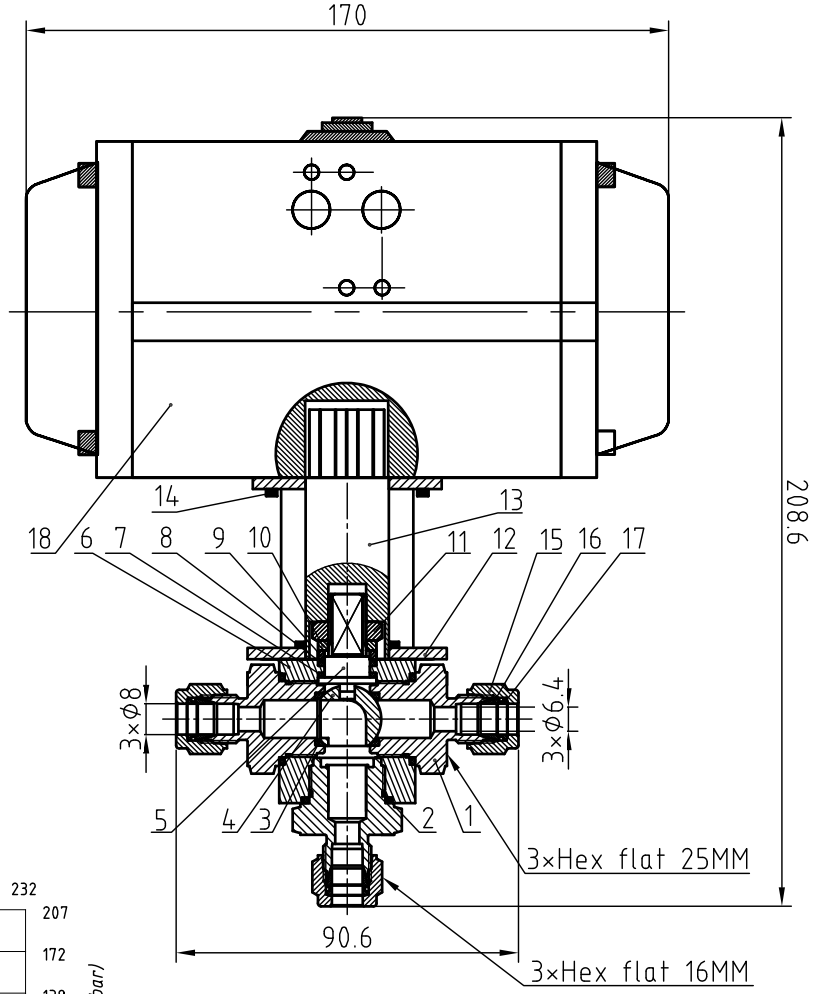

IDX	Designation	Materials
1	Body	316 L/A479
2	O-ring	FKM
3	Seat	PTFE
4	Ball	316 L/A479
5	Stem	316 L/A479
6	End Connection	316 L/A479
7	Lower Packing	PEEK
8	Stem Packing	PTFE
9	Stem Washer	316 L/A479
10	Spring Washer	Stainless steel
11	Stem Nut	Stainless steel
12	Mounting Bracket	Stainless steel
13	Drive Sleeve	316L/A479
14	Set Screw	Stainless steel
15	Nut	316 L/A479
16	Front Ferrules	316 L/A479
17	Rear Ferrules	316 L/A479
18	Pneumatic actuator	Aluminum alloy

Pressure vs. Temperature

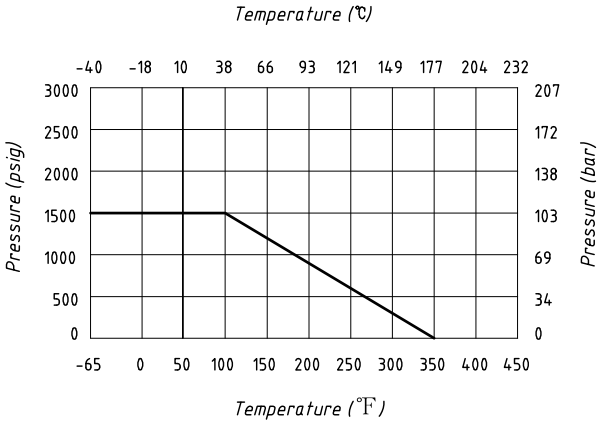

NOTE:Dimensions for reference only.

Linear unit of size: mm			Ball Valve				HTA-ПРОМ ТЕХНОЛОГИИ РЕШЕНИЯ СЕРВИС
	signature	date					
design			versions	1	proportion	1:2	BVN4-2A-3B-D-8M-HD-S
audit							
ratify					Page 1/1		