Valve Features	
Maximum working pressure	6000psig
Working temperature	-60℃~232℃
Orifice	10mm
CV	7.5

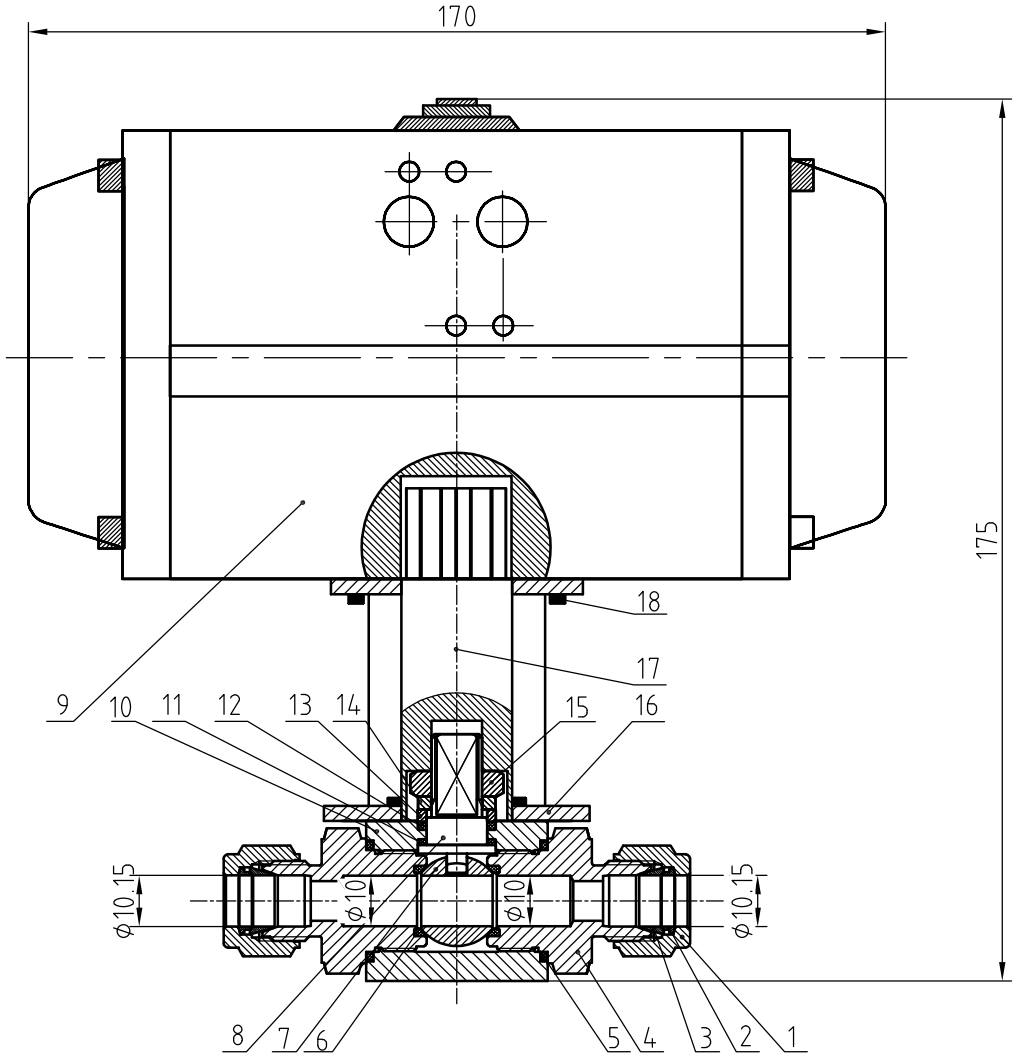

Item	designation	materials
1	Nut	316L/A479
2	Rear Ferrules	316L/A479
3	Front Ferrules	316L/A479
4	End Connection	316L/A479
5	o-ring	Fluoroelastomer
6	valve seat	PEEK
7	Ball	316L/A479
8	valve rod	316L/A479
9	Pneumatic actuator	Aluminum alloy
10	valve body	316/A479
11	lower packing	PTFE GF25
12	upper packing	PTFE
13	packing seat	316L/A479
14	spring washer	stainless steel
15	Hexagon nuts	stainless steel
16	Drive sleeve	316L/A479
17	Mounting Bracket	stainless steel
18	Set Screw	stainless steel

NOTE:Dimensions for reference only.

Linear unit of size: mm			Ball Valve				НТА-ПРОМ ТЕХНОЛОГИИ РЕШЕНИЯ СЕРВИС
	signature	date					
design			versions	1	proportion	1:2	BVN4-2A-D-10M-PK-RP-NO-S
audit							
ratify					Page 1/1		