Valve Features	
Maximum working pressure	7500psig
Working temperature	-54°C~232°C
Orifice	0.39in.(10mm)
Cv	7.5

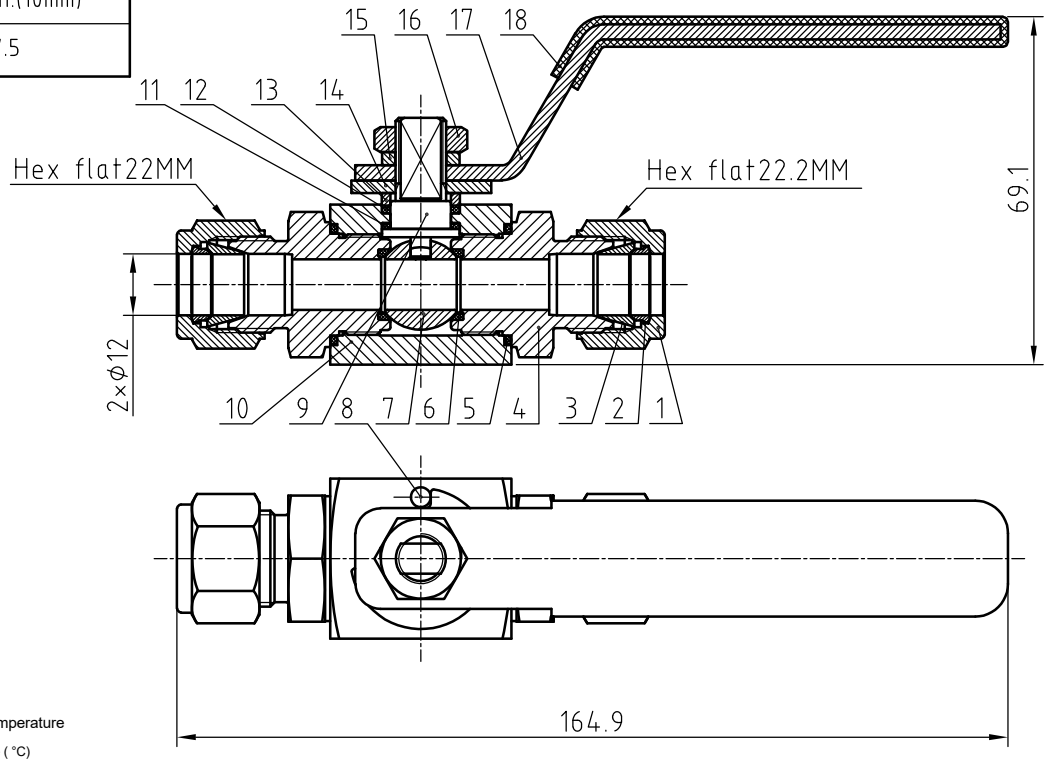

IDX	designation	materials
1	Nut	316/A479
2	Rear Ferrules	316/A479
3	Front Ferrules	316/A479
4	End Connection	316/A479
5	O-ring	FKM
6	Seat	PEEK
7	Ball	316/A479
8	Stop Pin	Stainless steels
9	Stem	316/A479
10	Body	316/A479
11	Lower Packing	PEEK
12	Stem Packing	RPTFE
13	Stem Washer	316/A479
14	Stop Block	316/A479
15	Spring Washer	stainless steels
16	Stem Nut	stainless steels
17	Handle	304/A240
18	Cover	PVC

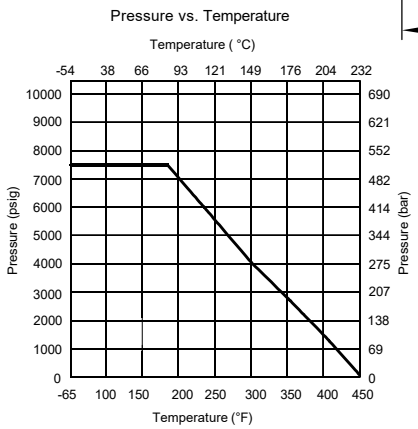

NOTE:Dimensions for reference only.

Linear unit of size: mm			Ball Valve				НТА-ПРОМ ТЕХНОЛОГИИ РЕШЕНИЯ СЕРВИС
	signature	date					
design			versions	1	proportion	1:2	BVN4-2A-D-12M-PK-S
audit							
ratify					Page 1/1		