Valve Features	
Maximum working pressure	7500psig
Working temperature	-54°C~232°C
Orifice	0.39in.(10mm)
Cv	7.5

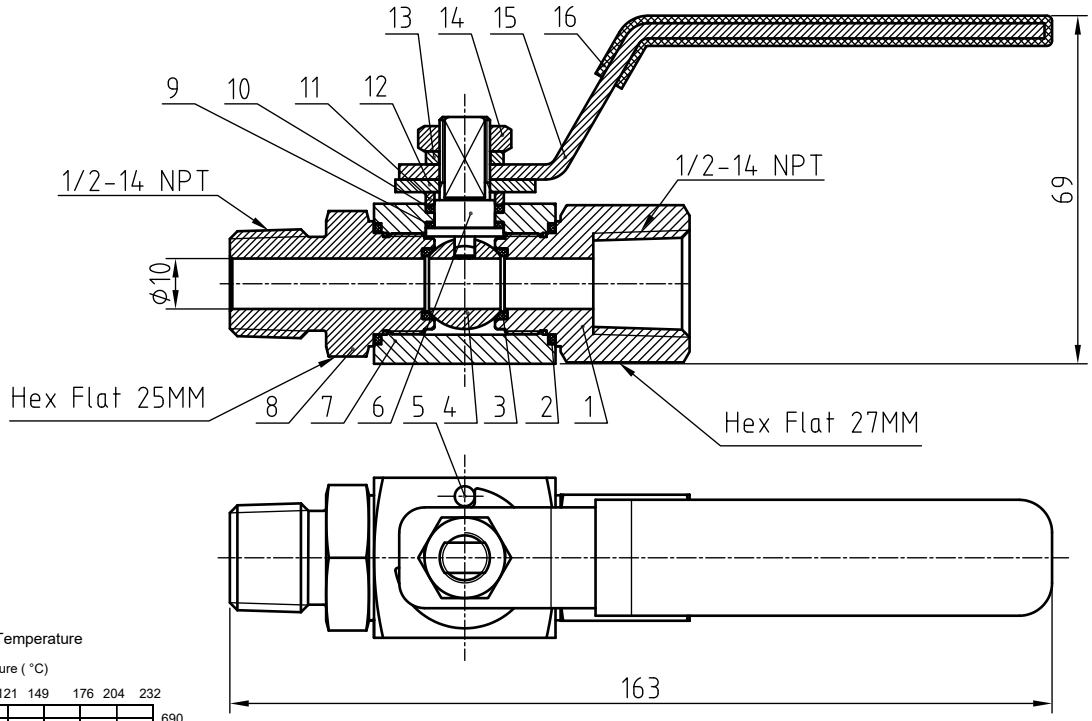

IDX	designation	materials
1	End Connection	316 L/A479
2	o-ring	FKM
3	Seat	PEEK
4	Ball	316 L/A479
5	Stop pin	316 L/A479
6	Stem	316 L/A479
7	Body	316 L/A479
8	End Connection	316 L/A479
9	lower packing	PEEK
10	Steam packing	RPTFE
11	Stem Washer	316 L/A479
12	Stop Block	stainless steel
13	Spring Washer	stainless steel
14	Stem Nut	316 L/A479
15	Handle	316 L/A479
16	Sleeve	PVC

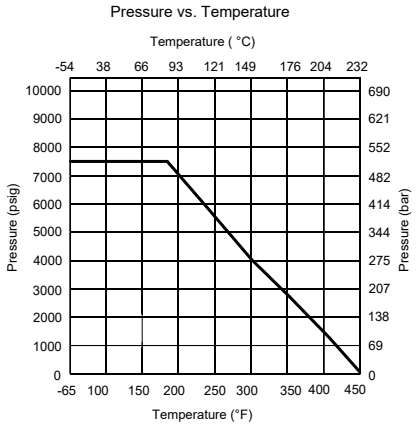

NOTE:Dimensions for reference only.

Linear unit of size: mm			Ball Valve				НТА-ПРОМ ТЕХНОЛОГИИ РЕШЕНИЯ СЕРВИС
	signature	date					
design			versions	1	proportion	1:1.5	BVN4-2A-MF-8N-PK-RP-S
audit							
ratify					Page 1/1		