Valve Features	
Maximum working pressure	7500psig
Working temperature	-54°C~232°C
Orifice	0.39in.(10mm)
Cv	7.5

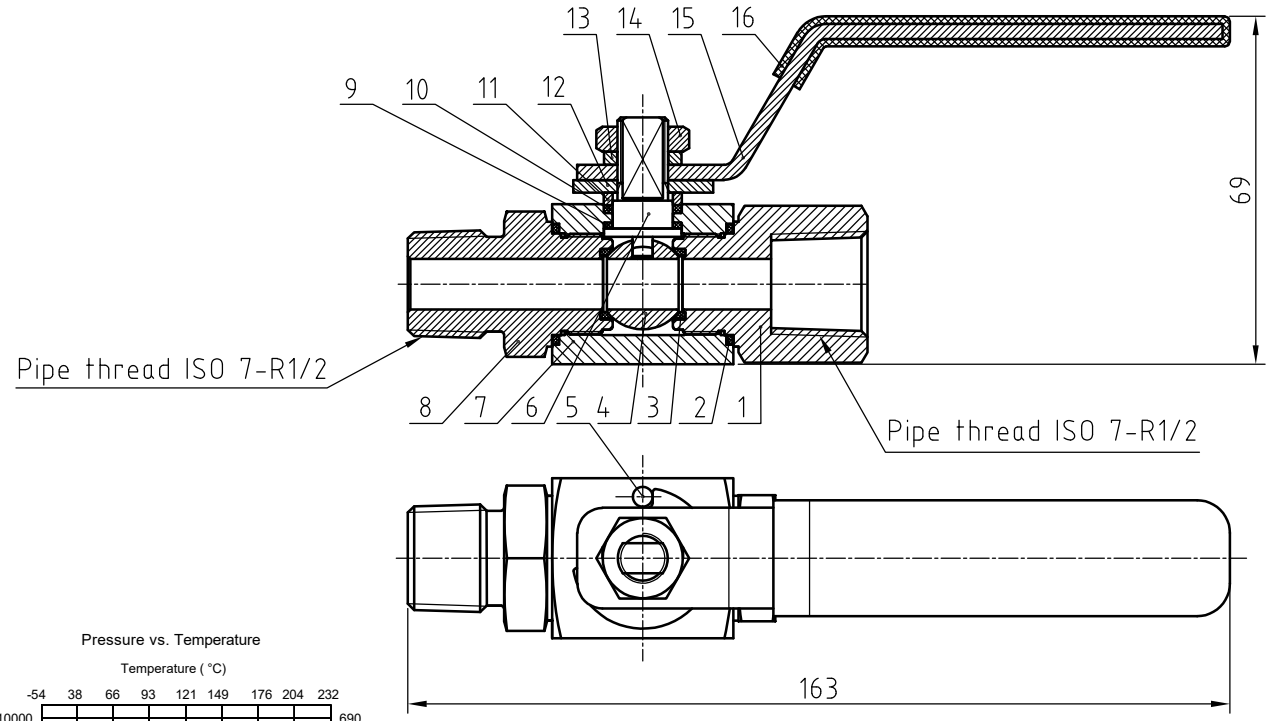

IDX	designation	materials
1	End Connection	316 L/A479
2	o-ring	FKM
3	Seat	PEEK
4	Ball	316 L/A479
5	Stop pin	316 L/A479
6	Stem	316 L/A479
7	Body	316 L/A479
8	lower packing	PEEK
9	Steam packing	RPTFE
10	Stem Washer	316 L/A479
11	Stop Block	stainless steel
12	Spring Washer	stainless steel
13	Stem Nut	316 L/A479
14	Handle	316 L/A479
15	Sleeve	PVC

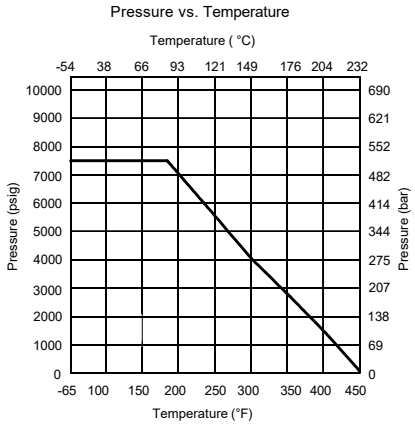

NOTE:Dimensions for reference only.

Linear unit of size: mm			Ball Valve				HTA-PROM ТЕХНОЛОГИИ РЕШЕНИЯ СЕРВИС
	signature	date					
design			versions	1	proportion	1:1.5	BVN4-2A-MF-8R-PK
audit							
ratify					Page 1/1		