| Valve Features | |
|---|---|
| Maximum working pressure | 5400psig |
| Working temperature | -40℃~232℃ |
| Orifice | 13mm |
| CV | 10 |

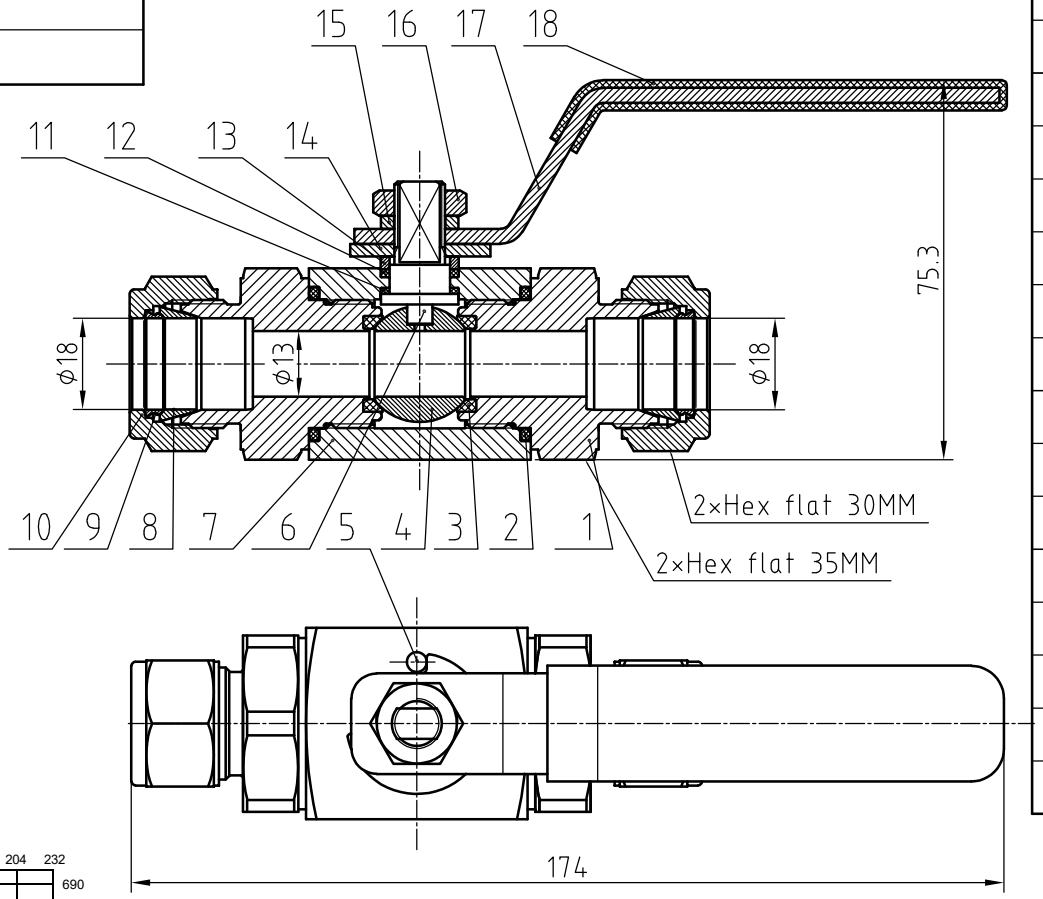


| IDX | designation | materials |
|---|---|---|
| 1 | End Connention | 316L/A479 |
| 2 | O-ring | FKM |
| 3 | Seat | PEEK |
| 4 | Ball | 316L/A479 |
| 5 | Stop Pin | Stainless steel |
| 6 | Stem | 316L/A479 |
| 7 | Body | 316L/A479 |
| 8 | Front Ferrules | 316L/A479 |
| 9 | Rear Ferrules | 316L/A479 |
| 10 | Nut | 316L/A479 |
| 11 | Lower Packing | PEEK |
| 12 | Stem Packing | PTFE |
| 13 | Stem Washer | 316L/A479 |
| 14 | Stop Block | Stainless steel |
| 15 | Spring Washer | 316L/A479 |
| 16 | Stem Nut | 316L/A479 |
| 17 | Handle | Stainless steel |
| 18 | Vinyl Cover | PVC |

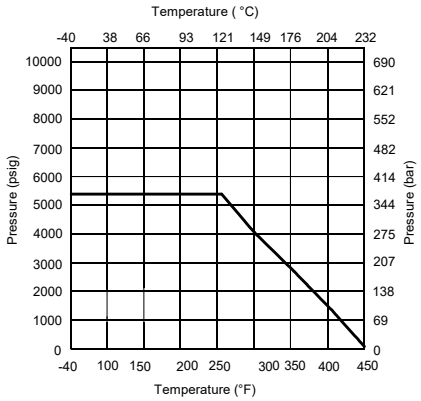


NOTE:Dimensions for reference only.

| Linear unit of size: mm | | | Ball valve | | | | НТА-ПРОМ ТЕХНОЛОГИИ РЕШЕНИЯ СЕРВИС |
|---|---|---|---|---|---|---|---|
| | signature | date | | | | | |
| design | | | versions | 1 | proportion | 1:1.5 | BVN4-2B-D-18M-PK-S |
| audit | | | | | | | |
| ratify | | | | | Page 1/1 | | |