Valve Features	
Maximum working pressure	6000psig
Working temperature	-40℃~121℃
Orifice	10mm
CV	7.5

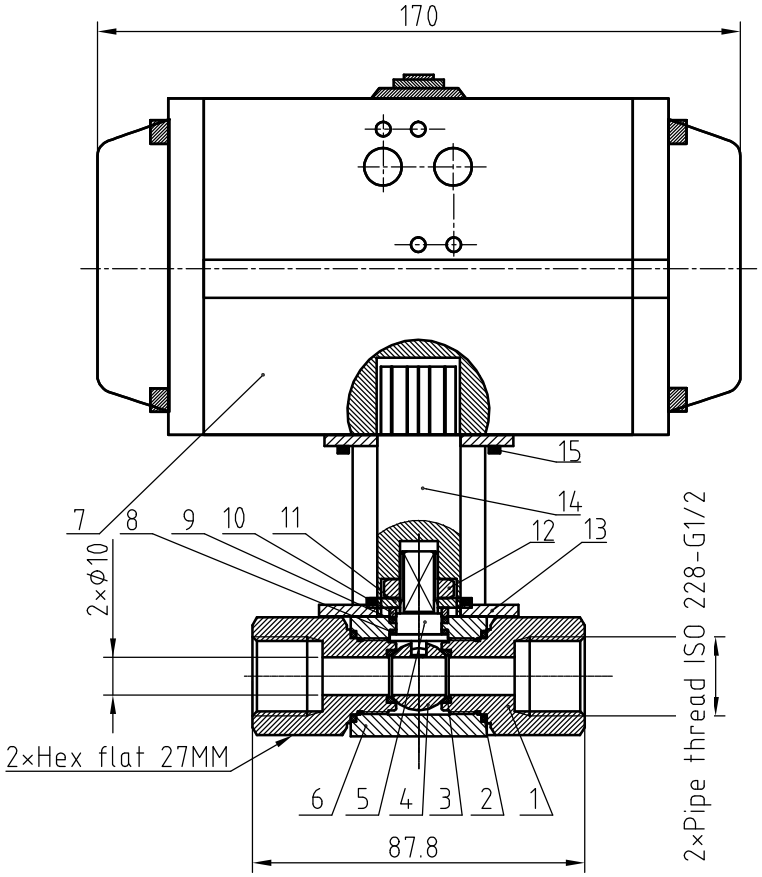

IDX	Designation	Material
1	End Connection	316L/A479
2	O-ring	FKM
3	Valve seat	PCTFE
4	Ball	316L/A479
5	Valve rod	316L/A479
6	Valve body	316L/A479
7	Pneumatic actuator	Aluminum alloy
8	Lower packing	PEEK
9	Upper packing	PTFE
10	Packing seat	316L/A479
11	Spring washer	Stainless steel
12	Hexagon nut	Stainless steel
13	Mounting Bracket	Stainless steel
14	Drive sleeve	316L/A479
15	Set Screw	Stainless steel

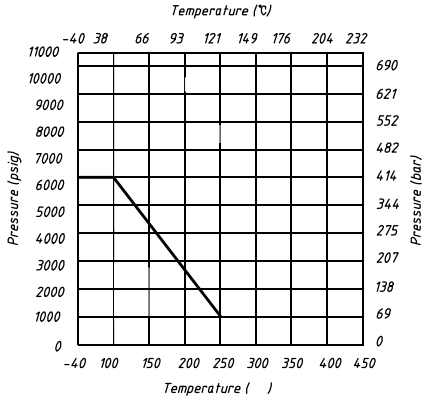

NOTE:Dimensions for reference only.

Linear unit of size: mm			Ball valve				HTA-ПРОМ ТЕХНОЛОГИИ РЕШЕНИЯ СЕРВИС
	signature	date					
design			versions	1	proportion	1:2	BVN4-2B-F-8GR-PC-QD-S
audit							
ratify					Page 1/1		