Valve Features	
Maximum working pressure	6000psig
Working temperature	-40℃~232℃
Orifice	13mm
Cv	10

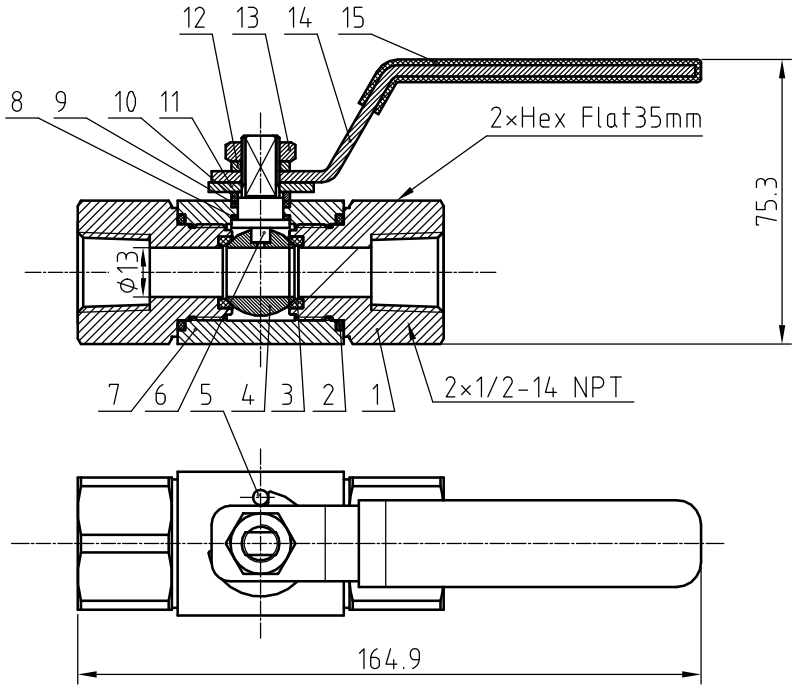

item	Component	Materials
1	End Connention	316 L/A479
2	O-ring	Fluorocarbon FKM
3	Seat	PEEK
4	Ball	316 L/A479
5	Stop Pin	316 L/A479
6	Stem	316 L/A479
7	Body	316 L/A479
8	Lower Packing	PEEK
9	Stem Packing	PTFE
10	Stem Washer	316 L/A479
11	Stop Block	304 SS/A240
12	Spring Washer	316 L/A479
13	Stem Nut	316 L/A479
14	Handle	304
15	Vinyl Cover	PVC

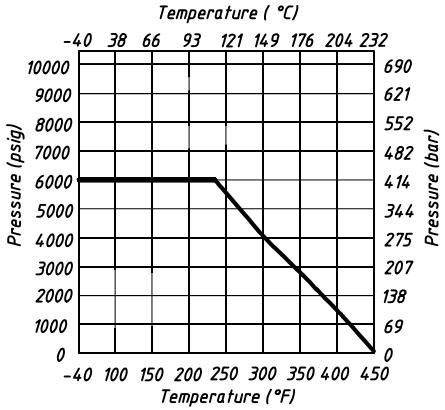

NOTE:Dimensions for reference only.

Linear unit of size: mm			Ball Valve				НТА-ПРОМ ТЕХНОЛОГИИ РЕШЕНИЯ СЕРВИС
	signature	date					
design			versions	1	proportion	1:2	BVN4-2B-F-8N-PK-S
audit							
ratify					Page 1/1		