Valve Features	
Maximum working pressure	1000psig (69bar)
Working temperature	-28℃~232℃
Orifice	0.28in. (7.1mm)
cv	2.5

IDX	designation	materials
17	handle sleeve	pvc
16	valve handle	stainless steel
15	Stem Nut	316L/A479
14	nut	stainless steel
13	spring cushion	stainless steel
12	packing seat	316L/A479
11	upper packing	PTFE
10	valve body	316L/A479
9	lower packing	PTFE
8	Front valve seat	PTFE
7	valve rod	316L/A479
6	Ball	316L/A479
5	Rear valve seat	PTFE
4	End Connection	316L/A479
3	Front Ferrules	316L/A479
2	rear Ferrules	316L/A479
1	nut	316L/A479

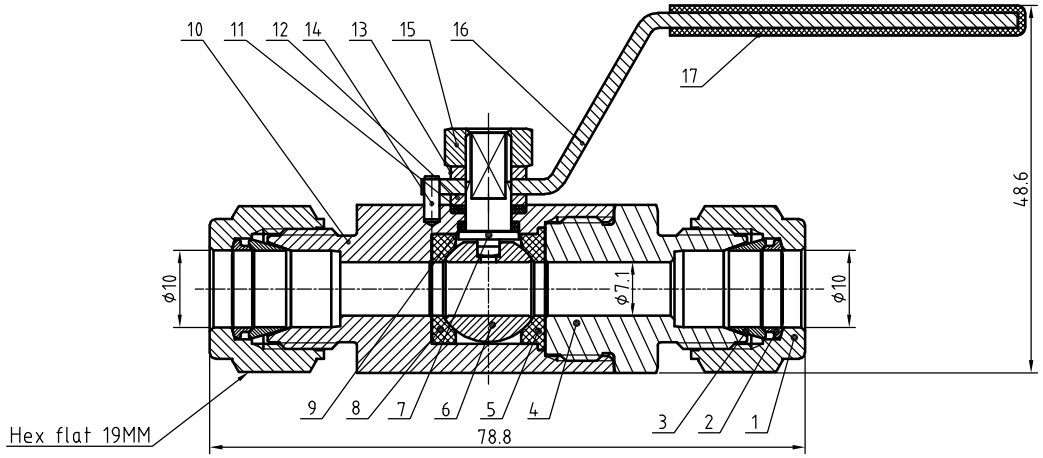

Pressure vs. Temperature
temperatureref(℃)

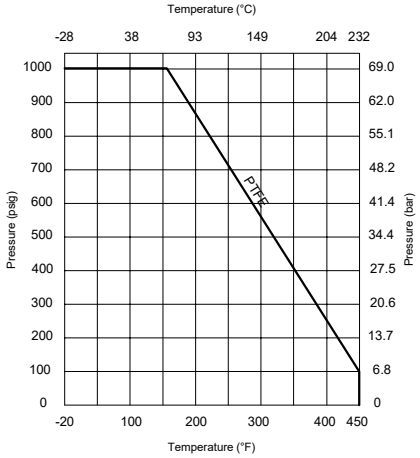

NOTE:Dimensions for reference only.

Linear unit of size: mm			Ball Valve				HTA-PROM ТЕХНОЛОГИИ РЕШЕНИЯ СЕРВИС
	signature	date					
design			versions	1	proportion	1:1	BVN5-2B-D-10M-S
audit							
ratify					Page 1/1		