Valve Features	
Maximum working pressure	1000 psig
Working temperature	-28°C~232°C
Orifice	7.1mm
Cv	2.50

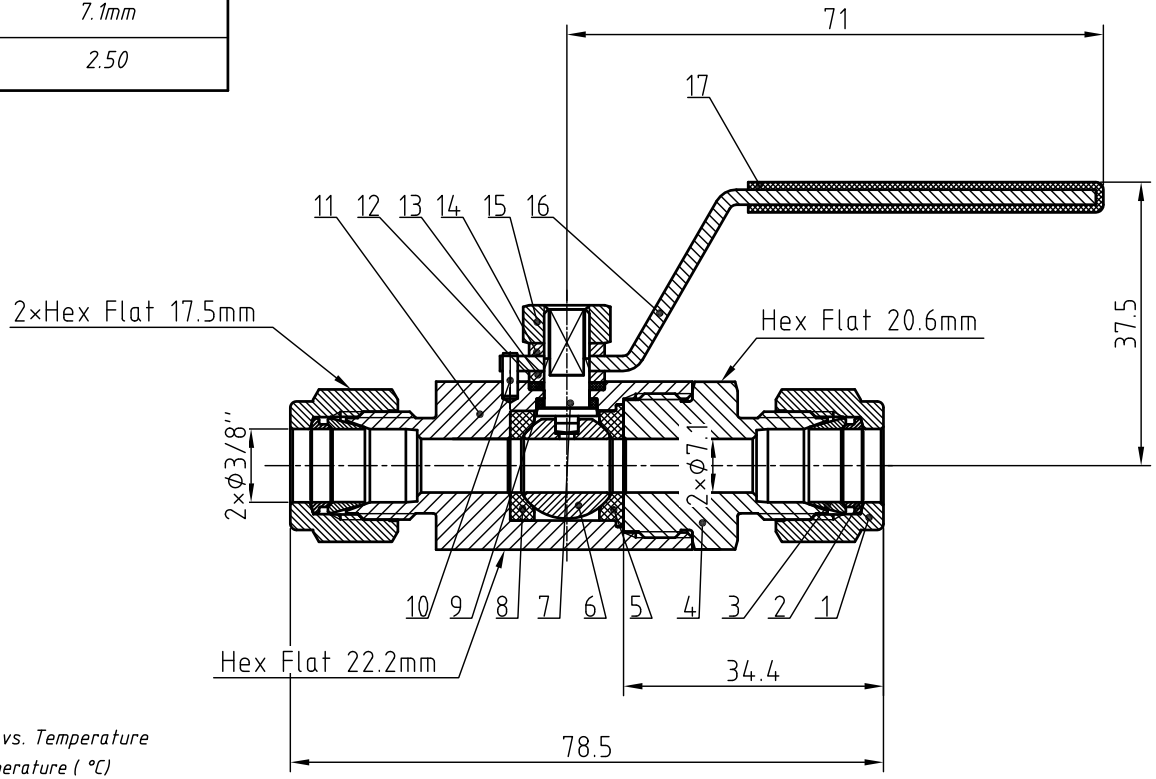

IDX	Designation	Materials
1	Nut	316L/A479
2	Rear Ferrules	316L/A479
3	Front Ferrules	316L/A479
4	End Connection	316L/A479
5	Back Seat	PTFE
6	Ball	316L/A479
7	Stem	316L/A479
8	Front Seat	PTFE
9	Lower Packing	PTFE
10	Stop Pin	Stainless Steel
11	Body	316L/A479
12	Upper Packing	PTFE
13	Washer	316L/A479
14	Gasket	Stainless Steel
15	Stem Nut	Stainless Steel
16	Handle	Stainless Steel
17	Sleeve	PVC

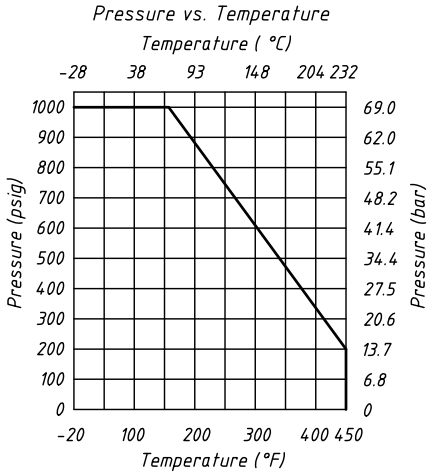

NOTE:Dimensions for reference only.

Linear unit of size: mm			Ball Valve				НТА-ПРОМ ТЕХНОЛОГИИ РЕШЕНИЯ СЕРВИС
	signature	date					
design			versions	1	proportion	1:1	BVN5-2B-D-6T-S
audit	✓	29.09.2025					
ratify					Page 1/1		