Valve Features	
Maximum working pressure	1000psig (69bar)
Working temperature	-28℃~232℃
Orifice	0.28in. (7.1mm)
Cv	2.5

IDX	Designation	Materials
1	End Connection	316 L/A479
2	Rear Valve Seat	PTFE
3	Ball	316 L/A479
4	Valve Rod	316 L/A479
5	Front Valve Seat	PTFE
6	Lower Packing	PTFE
7	Valve Body	316 L/A479
8	Spring Cushion	Stainless Steel
9	Upper Packing	PTFE
10	Packing Seat	316 L/A479
11	Nut	Stainless Steel
12	Stem Nut	316 L/A479
13	Valve Handle	Stainless Steel
14	Sleeve	Pvc

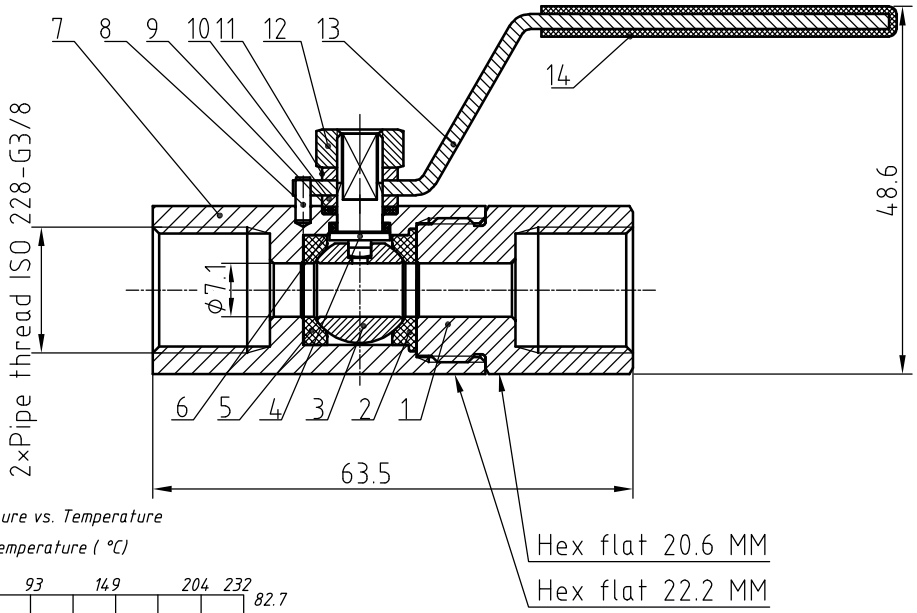

Pressure vs. Temperature

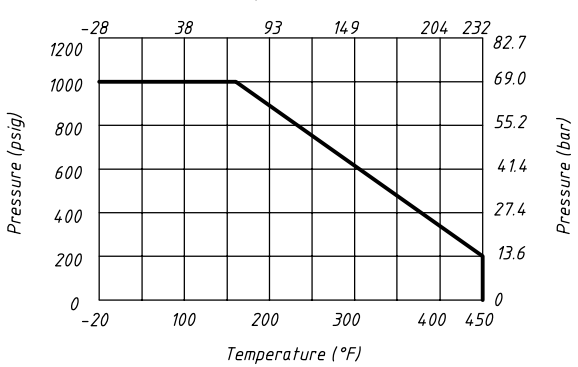

NOTE:Dimensions for reference only.

Linear unit of size: mm			Ball Valve				НТА-ПРОМ ТЕХНОЛОГИИ РЕШЕНИЯ СЕРВИС
	signature	date					
design			versions	1	proportion	1:1	BVN5-2B-F-6GR-S
audit							
ratify					Page 1/1		