Valve Features	
Maximum working pressure	1000 psig (69bar)
Working temperature	-28°C~232°C
Orifice	0.35in.(8.9mm)
Cv	5.30

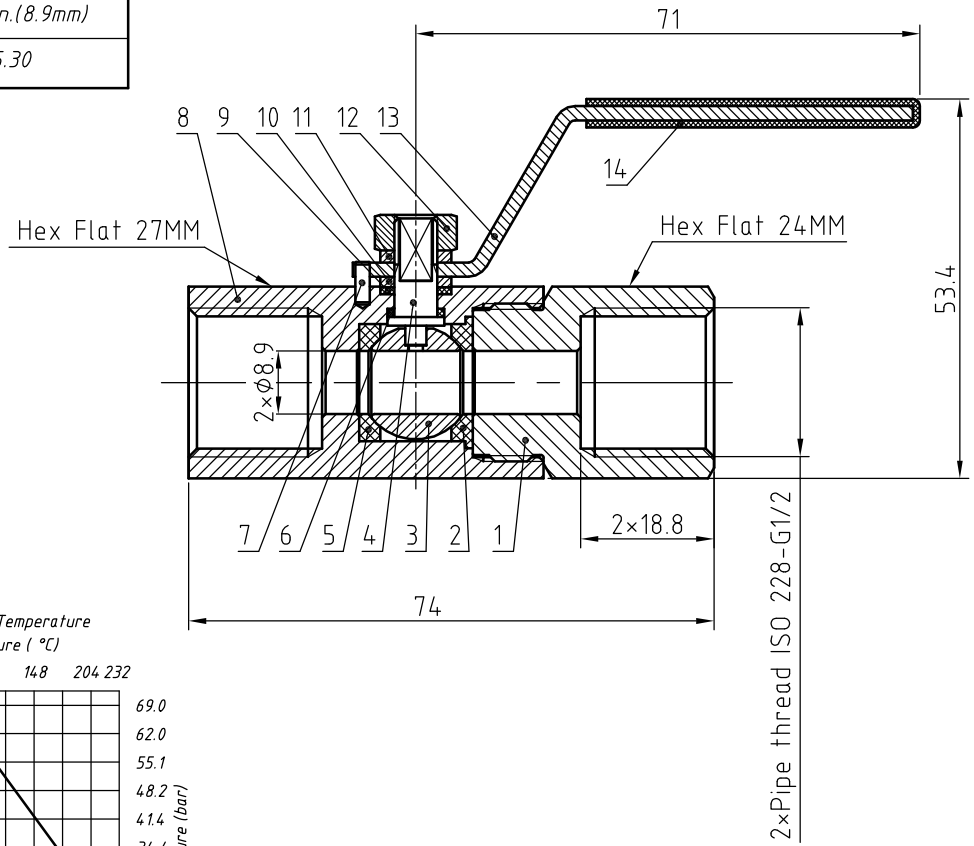

Item	Component	Materials
1	End Connection	316 L/A479
2	Back Seat	PTFE
3	Ball	316 L/A479
4	Stem	316 L/A479
5	Front Seat	PTFE
6	Lower Packing	PTFE
7	Stop Pin	304/A240
8	Body	316 L/A479
9	Upper Packing	PTFE
10	Washer	316 L/A479
11	Gasket	304/A240
12	Coned-disk Spring	304/A240
13	Handle	304/A240
14	Cover	Vinyl

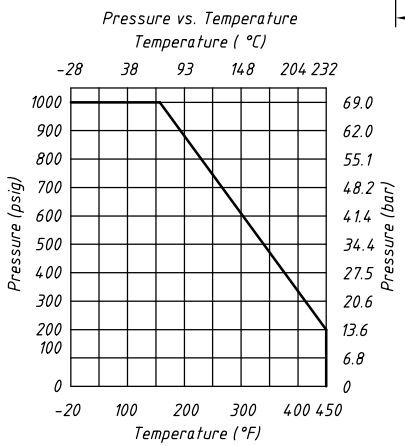

NOTE:Dimensions for reference only.

Linear unit of size: mm			Ball Valve				HTA-ПРОМ ТЕХНОЛОГИИ РЕШЕНИЯ СЕРВИС
	signature	date					
design			versions	1	proportion	1:1	BVN5-2C-F-8G-S
audit	✓	11.09.2025					
ratify					Page 1/1		