Valve Features	
Maximum Working Pressure	1000psig
Working Temperature	-28℃~232℃
Orifice	8.9mm
CV	5.3

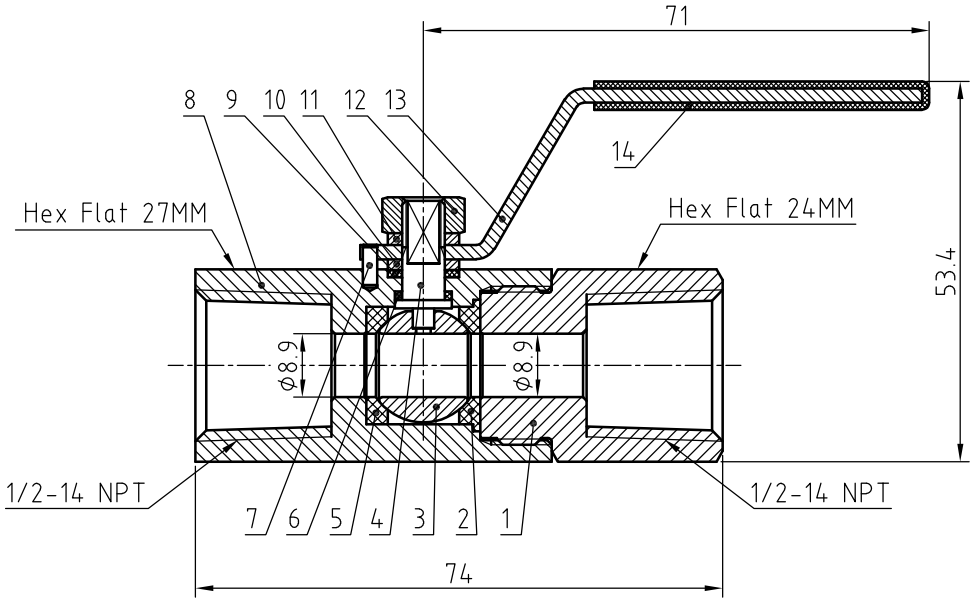

IDX	Designation	Materials
1	Ball Valve Connector	N04400/B164
2	Rear Valve Seat	PTFE
3	Valve Ball	N04400/B164
4	Stem	N04400/B164
5	Front Valve Seat	PTFE
6	Lower Packing	PTFE
7	Cylindrical Pin	304
8	Valve Body	N04400/B164
9	Upper Packing	PTFE
10	Packing Seat	316/A479
11	Spring Washer	304
12	Nut	304
13	Ball Valve Handle	304
14	Handle Sleeve	pvc

NOTE:Dimensions for reference only.

Linear unit of size: mm			Ball Valve				НТА-ПРОМ ТЕХНОЛОГИИ РЕШЕНИЯ СЕРВИС
	signature	date					
design			versions	1	proportion	1:1	BVN5-2C-F-8N-SG-M
audit							
ratify					Page 1/1		