Valve Features	
Maximum working pressure	1000psig
Working temperature	-28℃~232℃
Orifice	8.9mm
CV	5.3

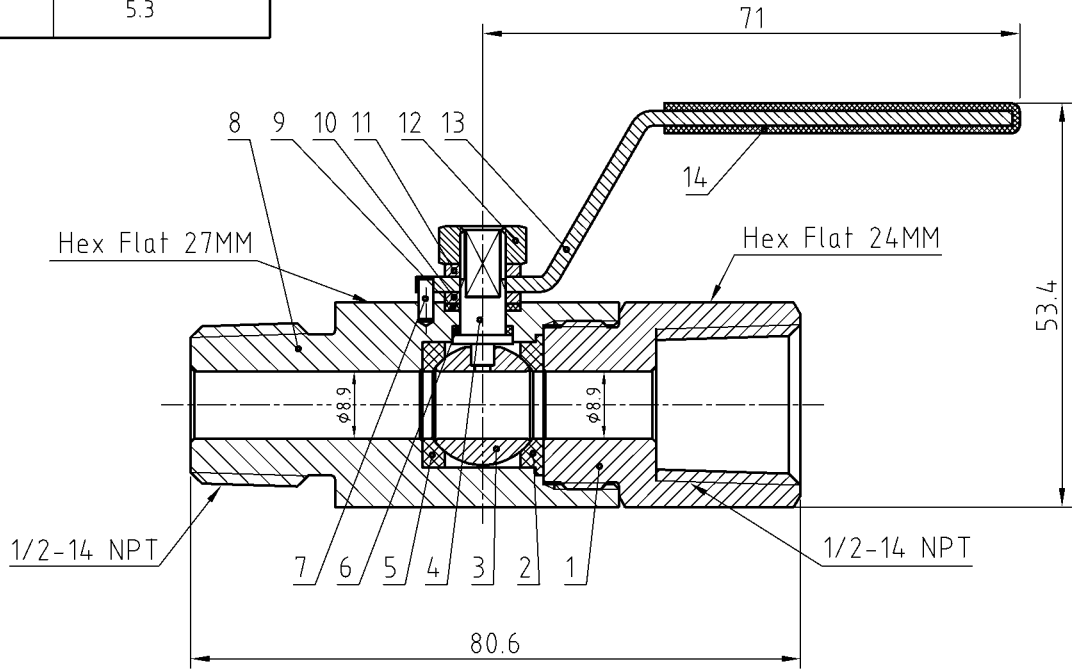

IDX	designation	materials
1	Ball valve connector	316L/A479
2	Rear valve seat	PTFE
3	valve ball	316L/A479
4	stem	316L/A479
5	Front valve seat	PTFE
6	lower packing	PTFE
7	Cylindrical Pin	304
8	valve body	316L/A479
9	upper packing	PTFE
10	packing seat	316L/A479
11	Spring Washer	304
12	nut	304
13	Ball Valve Handle	304
14	handle sleeve	pvc

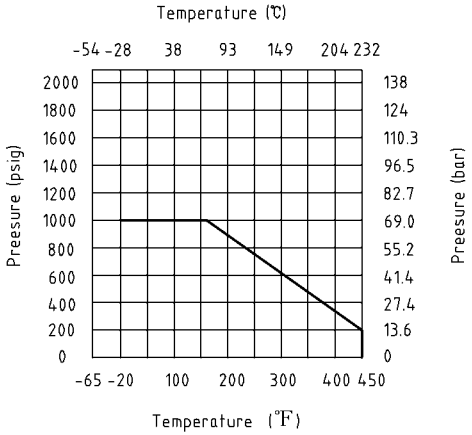

NOTE:Dimensions for reference only.

Linear unit of size: mm			Ball Valve				HTA-ПРОМ ТЕХНОЛОГИИ РЕШЕНИЯ СЕРВИС
	signature	date					
design			versions	1	proportion	1:1	BVN5-2C-MF-8N-S
audit							
ratify					Page 1/1		