Valve Features	
Maximum working pressure	1000psig
Working temperature	-28℃~232℃
Orifice	12mm
CV	8.60

Item	Component	Material
1	End Connection	316L/A479
2	Rear valve seat	PTFE
3	Ball	316L/A479
4	Valve rod	316L/A479
5	Front valve seat	PTFE
6	Lower packing	PTFE
7	Valve body	316L/A479
8	Upper packing	PTFE
9	Packing seat	316L/A479
10	Spring cushion	stainless steel
11	Nut	stainless steel
12	Stem Nut	316L/A479
13	Valve handle	stainless steel
14	Handle sleeve	pvc

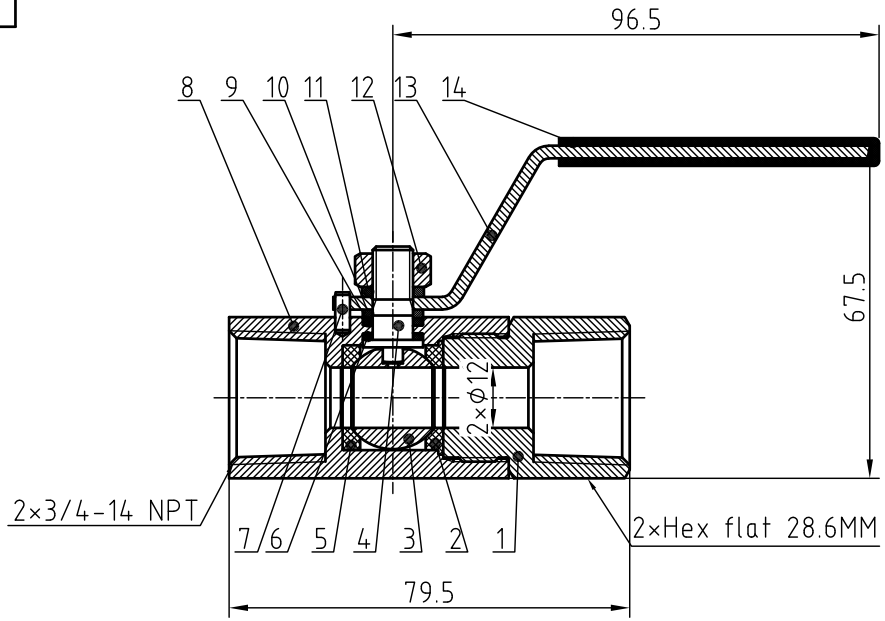

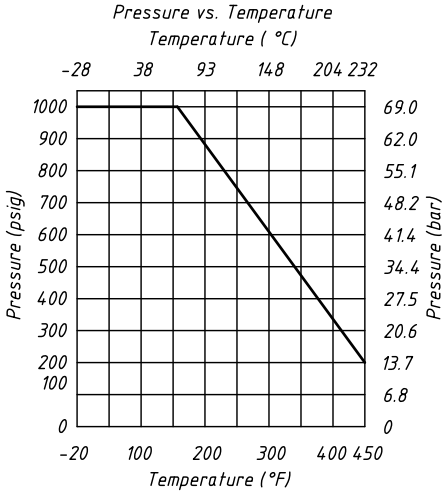

NOTE:

1.Dimensions for reference only;

2.Thread standard:ASME B1.20.1-1983.

Linear unit of size: mm			Ball valve				НТА-ПРОМ ТЕХНОЛОГИИ РЕШЕНИЯ СЕРВИС
	signature	date					
design			versions	1	proportion	1:1.5	BVN5-2D-F-12N-S
audit	✓	09.09.2025					
ratify					Page 1/1		