Valve Features	
Maximum working pressure	2000psig
Working temperature	-60℃~232℃
Orifice	8.9mm
CV	9.25

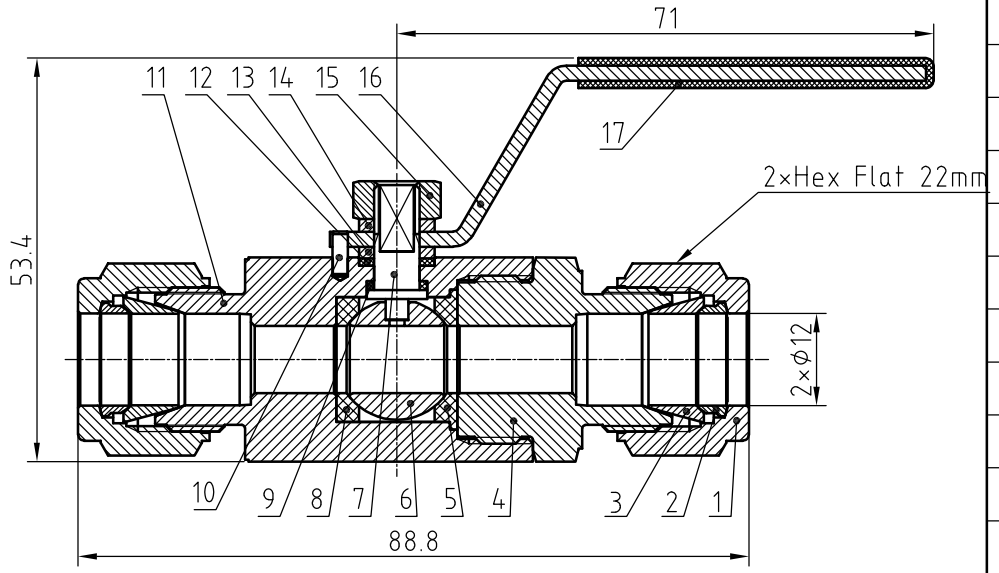

item	Component	Materials
1	Nut	316 L/A479-NACE
2	Rear Ferrules	316 L/A479-NACE
3	Front Ferrules	316 L/A479-NACE
4	End Connection	316 L/A479-NACE
5	Back Seat	PFA
6	Ball	316 L/A479-NACE
7	Stem	316 L/A479-NACE
8	Front Seat	PFA
9	Lower Packing	PTFE GF25
10	Stop Pin	Stainless steel
11	Body	316 L/A479-NACE
12	Upper Packing	PTFE GF25
13	Washer	316 L/A479-NACE
14	Gasket	316L/A479-NACE
15	Stem Nut	316L/A479-NACE
16	Handle	Stainless steel
17	Cover	Vinyl

Pressure vs. Temperatur
temperaturef(℃)

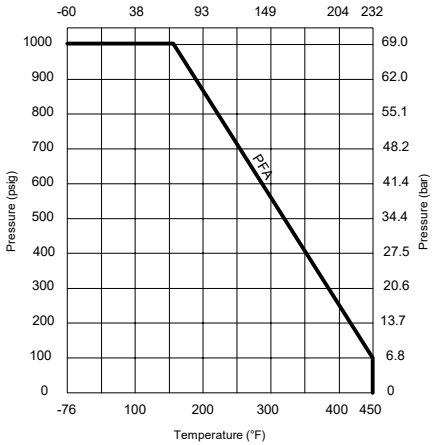

NOTE:Dimensions for reference only.

Linear unit of size: mm			Ball Valves				НТА-ПРОМ ТЕХНОЛОГИИ РЕШЕНИЯ СЕРВИС
	signature	date					
design			versions	1	proportion	1:1	BVN6-2B-D-12M-RP-SG-S
audit							
ratify					Page 1/1		