Valve Features	
Maximum working pressure	2000 psig (138 bar)
Working temperature	-60°C~204°C
Orifice	0.63in.(16mm)
Cv	17.35

item	Component	Materials
1	End Connection	316 L/A479
2	Back Seat	PFA
3	Ball	316 L/A479
4	Stem	316 L/A479
5	Front Seat	PFA
6	Lower Packing	PTFE GF25
7	Stop Pin	304/A240
8	Reducing Bushing	316 L/A479
9	Body	316 L/A479
10	Upper Packing	PTFE GF25
11	Washer	316 L/A479
12	Gasket	304/A240
13	Coned-disk Spring	304/A240
14	Handle	304/A240
15	Sleeve	PVC

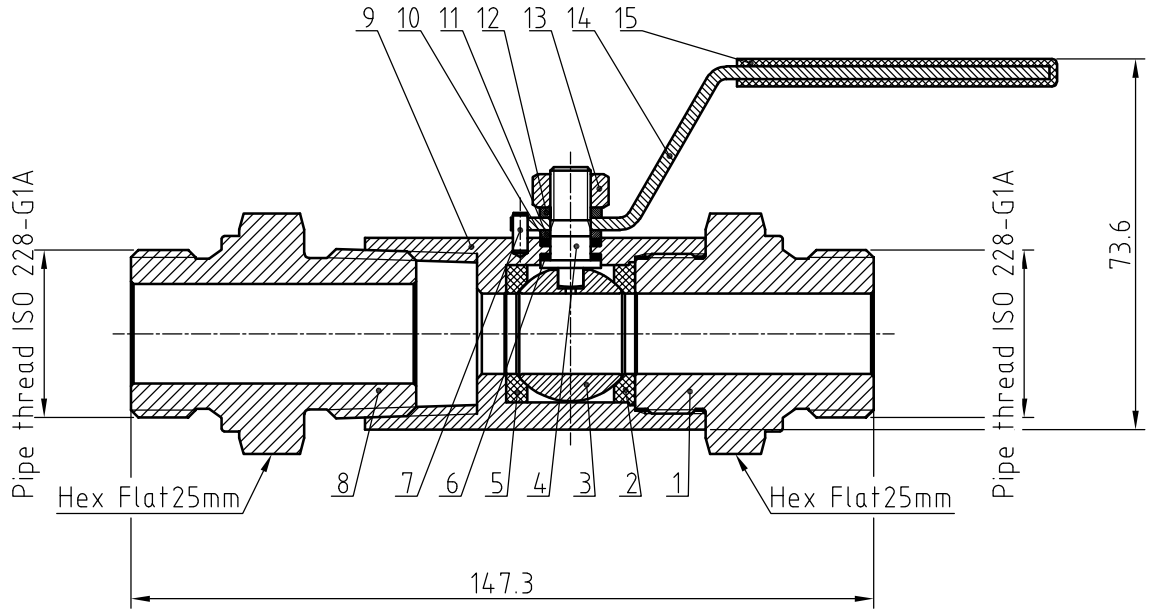

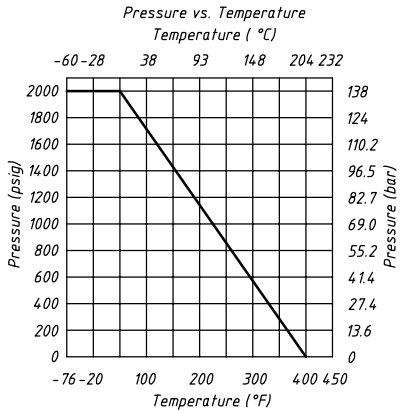

NOTE:Dimensions for reference only.

Linear unit of size: mm			Ball Valves				НТА-ПРОМ ТЕХНОЛОГИИ РЕШЕНИЯ СЕРВИС
	signature	date					
design			versions	1	proportion	1:1.5	BVN6-2E-M-16G-RP-S
audit							
ratify					Page 1/1		