Valve Features	
Maximum working pressure	8400psig
Working temperature	-18℃~232℃
Orifice	4.8mm
CV	0.75

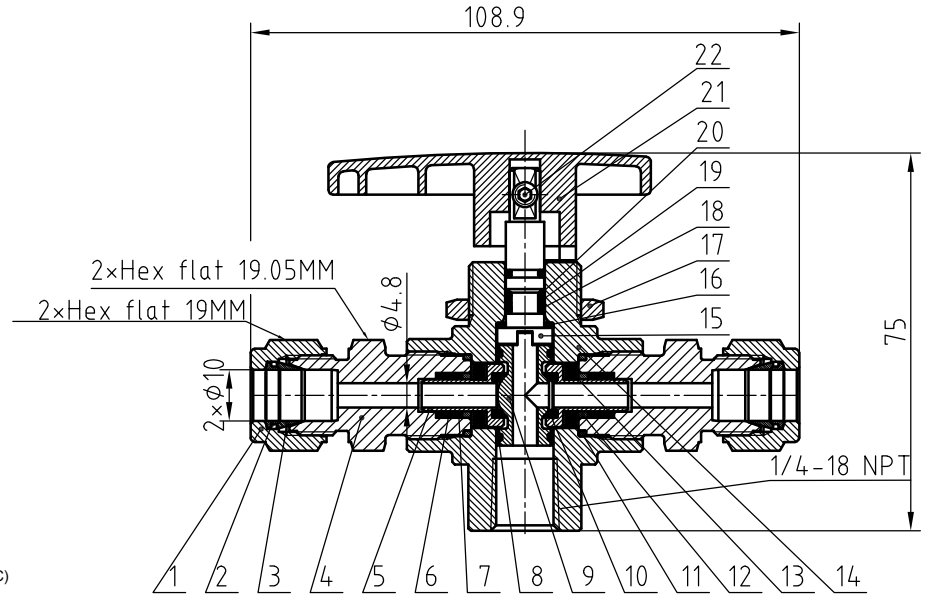

IDX	designation	materials
1	Nut	316L/A479
2	Rear Ferrules	316L/A479
3	Front Ferrules	316L/A479
4	End Connection	316L/A479
5	Seat Retainer	316 L/A479
6	O-ring	FKM
7	Seat Retainer Backup Ring	PEEK
8	Trunnion Backup Ring	PEEK
9	Ball	316L/A479
10	O-ring	FKM
11	Seat	PEEK
12	End Connection Seal	316L/A479
13	Seat Retainer Guide	316L/A479
14	*Packing Spring*	*S17700/A693*
15	Body	316L/A479
16	Stem	316L/A479
17	Panel Nut	316L/A479
18	Stem Washer	PEEK
19	O-ring	FKM
20	Primary Stem Backup Ring	PEEK
21	Handle	Nylon with SS insert
22	Set Screw	Galvanized carbon steel

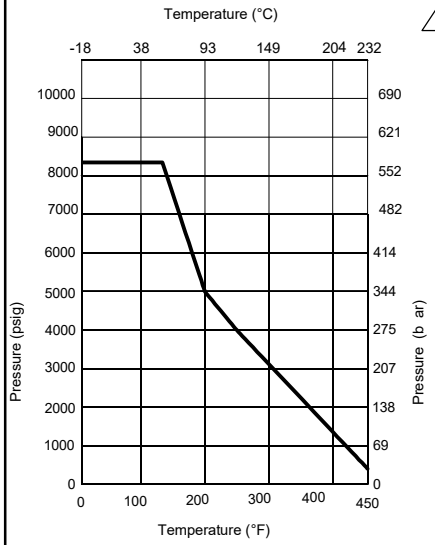

NOTE:Dimensions for reference only.

Linear unit of size: mm			Ball valve				HTA-ПРОМ ТЕХНОЛОГИИ РЕШЕНИЯ СЕРВИС
	signature	date					
design			versions	1	proportion	1:1	BVN8-2-3B-D-10M-S
audit							
ratify					Page 1/1		