Valve Features	
Maximum working pressure	6000psig (414bar)
Working temperature	-54℃~232℃
Orifice	0.19in. (4.8mm)
cv	0.7

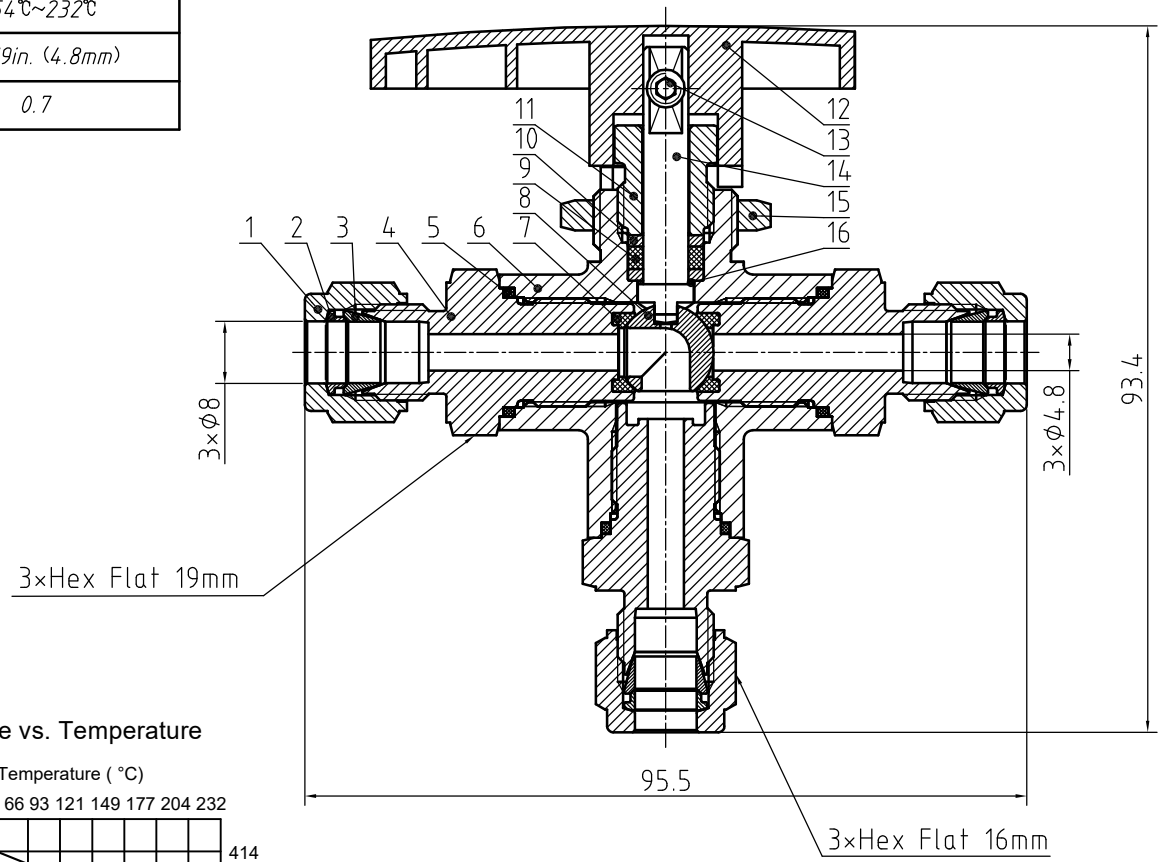

Item	Component	Material
1	Nut	316L/A479
2	Rear Ferrule	316L/A479
3	Front Ferrule	316/A479
4	End Connection	316/A479
5	Connection O-ring	PTFE
6	Body	316L/A479
7	Seat	PEEK
8	Ball	316/A479
9	Stem Packing	PTFE
10	Stem Washer	316L/A479
11	Packing Nut	316L/A479
12	Handle	Carbon steel
13	Set Screw	316L/A479
14	Stem	316L/A479
15	Panel Nut	316/A479
16	Stem Back-up Ring	PEEK

Pressure vs. Temperature

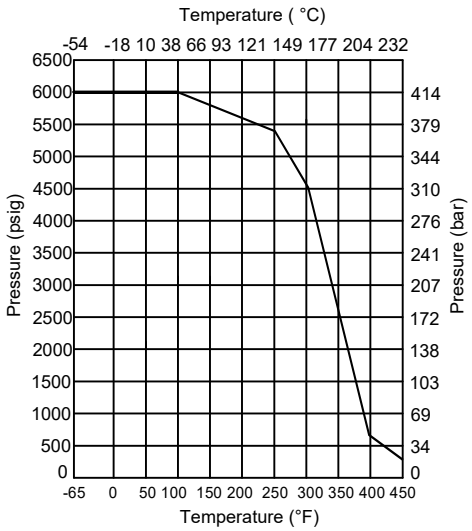

NOTE:Dimensions for reference only.

Linear unit of size: mm			Ball valve				HTA-PROM ТЕХНОЛОГИИ РЕШЕНИЯ СЕРВИС
	signature	date					
design			versions	1	proportion	1:1	BVN9-2B-3B-D-8M-PK-S
audit							
ratify					Page 1/1		