Valve Features	
Maximum working pressure	6000psig(414bar)
Working temperature	-54℃~177℃
Orifice	0.25in.(6.4mm)
CV	2.34

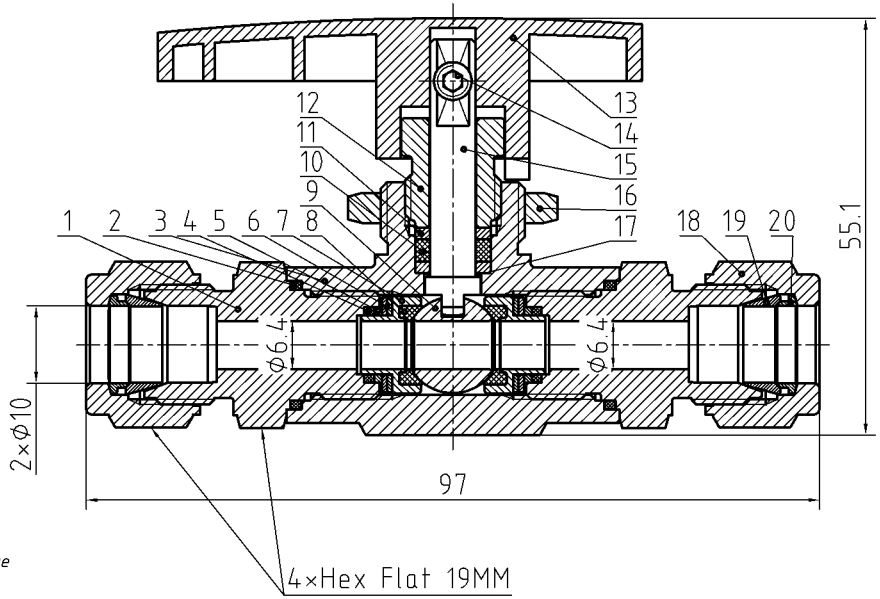

Item	Component	Material
1	End Connection	316L/A479
2	Connection O-ring	PTFE
3	Body	316L/A479
4	Seat Retainer Backup Ring	PTFE
5	Seat Retainer Guide	316L/A479
6	Seat Spring	Alloy X-750
7	Seat Retainer	316L/A479
8	Seat	PCTFE
9	Ball	316L/A479
10	Stem Packing	PTFE
11	Stem Washer	316L/A479
12	Packing Nut	316L/A479
13	Handle	Zinc alloy
14	Set Screw	316L/A479
15	Stem	316L/A479
16	Panel Nut	316L/A479
17	Stem Back-up Ring	PEEK
18	Nut	316L/A479
19	Front Ferrule	316L/A479
20	Rear Ferrule	316L/A479

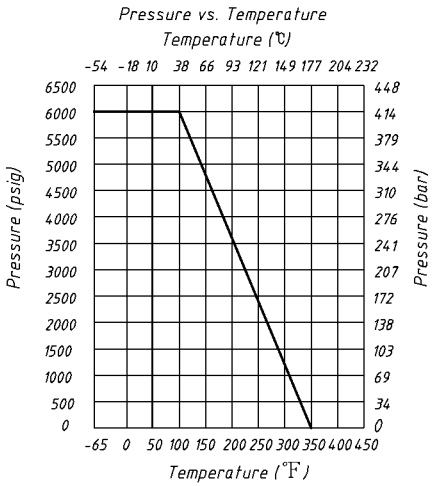

NOTE:Dimensions for reference only.

Linear unit of size: mm			Ball Valves				НТА-ПРОМ ТЕХНОЛОГИИ РЕШЕНИЯ СЕРВИС
	signature	date					
design			versions	1	proportion	1:1	BVN9-2B-D-10M-PC-S
audit							
ratify					Page 1/1		