Valve Features	
Maximum working pressure	6000psig (414bar)
Working temperature	-54℃~232℃
Orifice	0.39in. (10mm)
cv	6.42

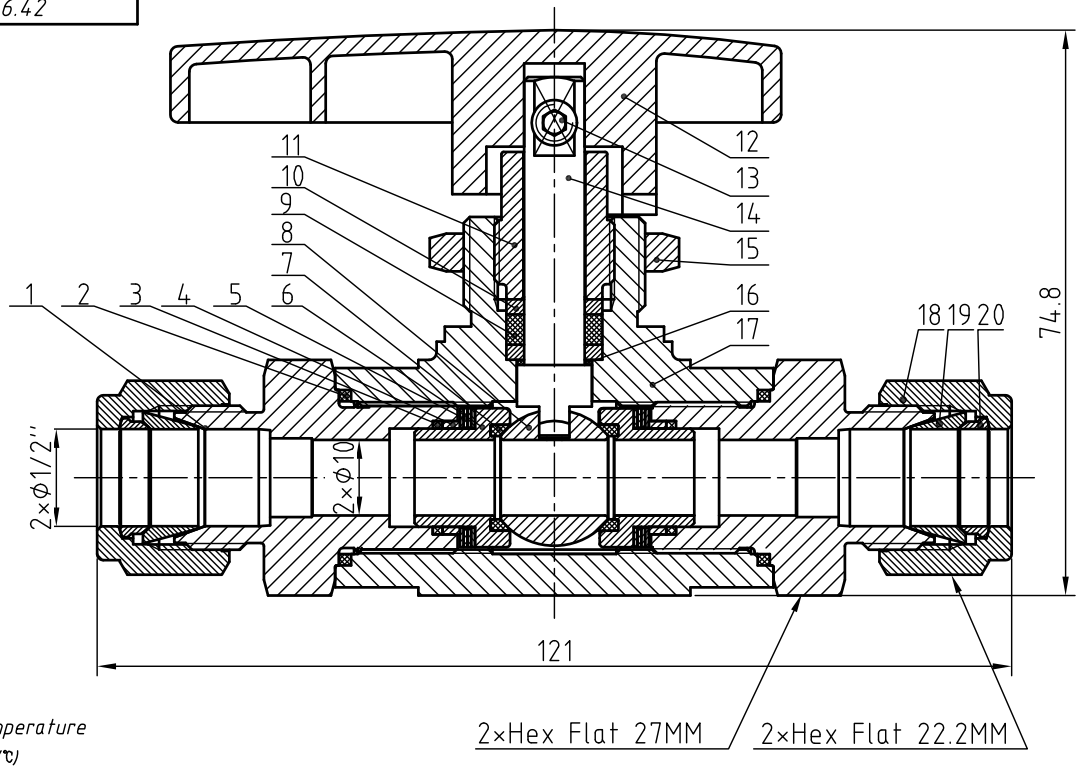

Item	Components	Materials
1	End Connection	316 L/A479
2	Connection O-ring	PTFE
3	Seat Retainer Backup Ring	PTFE
4	Seat Retainer Guide	316 L/A479
5	Seat Spring	Alloy X-750
6	Seat Retainer	316 L/A479
7	Seat	PEEK
8	Ball	316 L/A479
9	Stem Packing	PTFE
10	Stem Washer	316 L/A479
11	Packing Nut	316 L/A479
12	Handle	Nylon
13	Set Screw	316 L/A479
14	Stem	316 L/A479
15	Panel Nut	316 L/A479
16	Stem Back-up Ring	PEEK
17	Body	316 L/A182
18	Nut	316 L/A479
19	Front Ferrules	316 L/A479
20	Rear Ferrules	316 L/A479

Pressure vs. Temperature

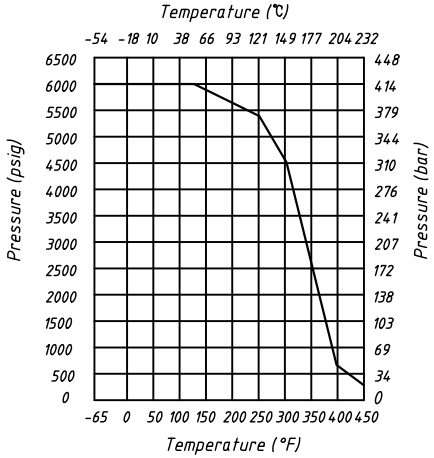

NOTE:Dimensions for reference only.

Linear unit of size: mm			Ball Valve				НТА-ПРОМ ТЕХНОЛОГИИ РЕШЕНИЯ СЕРВИС
	signature	date					
design			versions	1	proportion	1:1	BVN9-2C-D-8T-PK-S
audit	✓	08.09.2025					
ratify					Page 1/1		