Valve Features	
Maximum working pressure	6000psig (414bar)
Working temperature	-54℃~177℃
Orifice	0.39in. (10mm)
cv	6.42

Item	Component	Material
1	End Connection	316/ASTM A479
2	Connection O-ring	PTFE
3	Body	316/ASTM A479
4	Seat	PCTFE
5	Ball	316/ASTM A479
6	Stem Packing	PTFE
7	Stem Washer	316/ASTM A479
8	Packing Nut	316/ASTM A479
9	Handle	Carbon steel
10	Set Screw	316/ASTM A479
11	Stem	316/ASTM A479
12	Panel Nut	316/ASTM A479
13	Stem Back-up Ring	PTFE

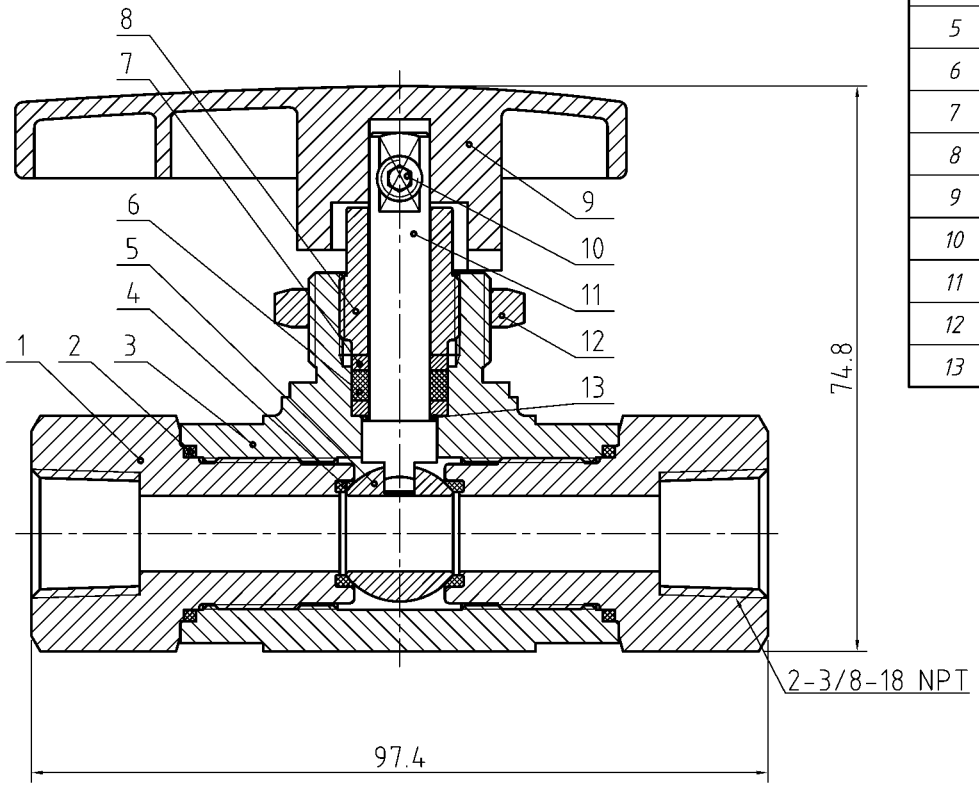

Pressure vs. Temperature

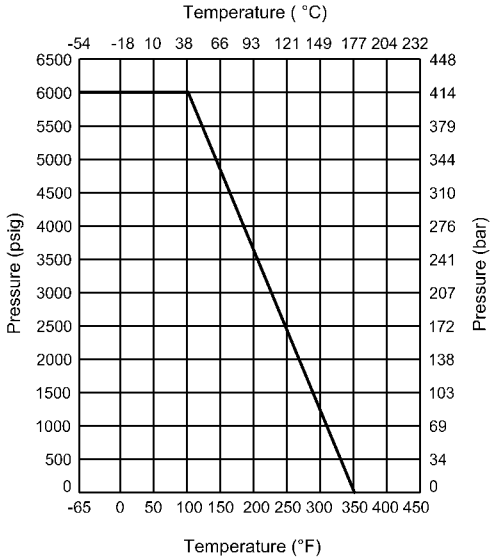

NOTE:Dimensions for reference only.

Linear unit of size: mm			Ball valve				НТА-ПРОМ ТЕХНОЛОГИИ РЕШЕНИЯ СЕРВИС
	signature	date					
design			versions	1	proportion	1:1	BVN9-2C-F-6N-PC-316
audit							
ratify					Page 1/1		