Valve Features	
Maximum working pressure	6000psig (414bar)
Working temperature	-54℃~232℃
Orifice	0.39in. (10mm)
cv	6.42

Item	Component	Material
1	End Connection	316L/A479
2	Connection O-ring	PTFE
3	Body	316L/A479
4	Seat	PEEK
5	Ball	316L/A479
6	Stem Packing	PTFE
7	Stem Washer	316L/A479
8	Packing Nut	316L/A479
9	Handle	Carbon steel
10	Set Screw	316L/A479
11	Stem	316L/A479
12	Panel Nut	316L/A479
13	Stem Back-up Ring	PEEK

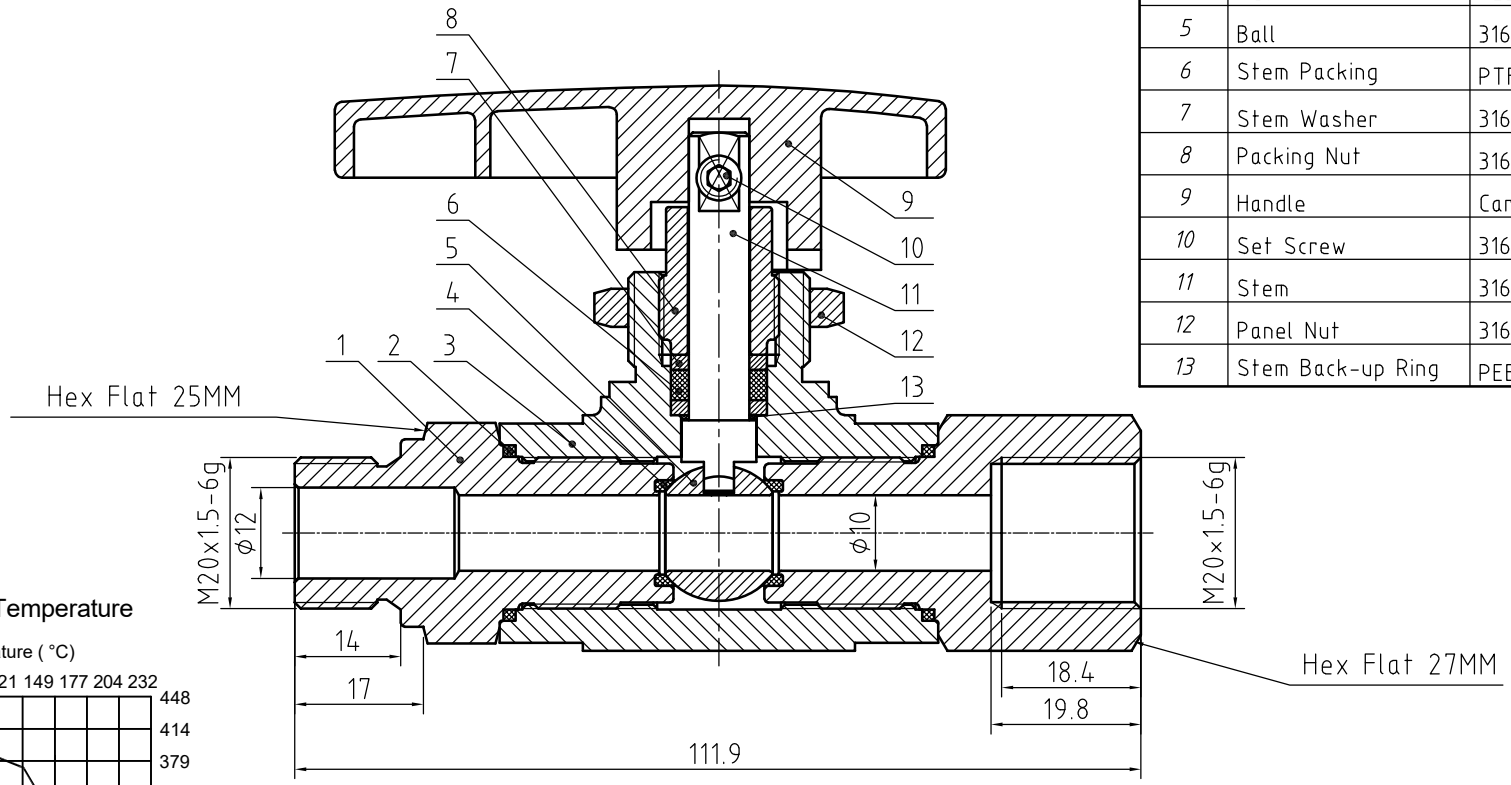

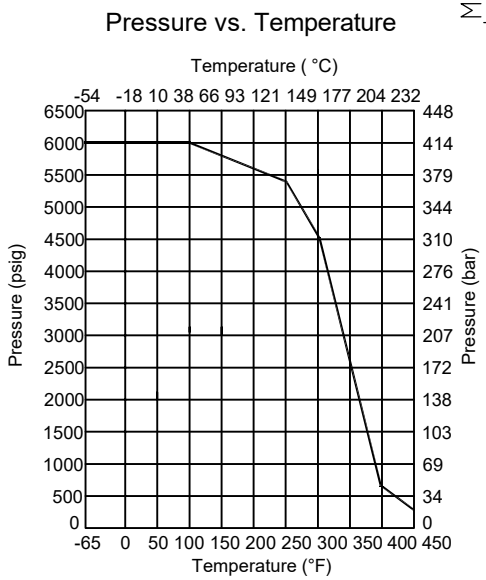

NOTE:Dimensions for reference only.

Linear unit of size: mm			Ball valve				НТА-ПРОМ ТЕХНОЛОГИИ РЕШЕНИЯ СЕРВИС
	signature	date					
design			versions	1	proportion	1:1	BVN9-2C-MF-20M15-PK-S
audit							
ratify					Page 1/1		