Valve Features	
Maximum working pressure	15000psig(1034bar)
Working temperature	0~400°F(-18~204℃)
Orifice	0.375in.(9.5mm)
Cv	3.51

Item	Component	Material
1	Handle	Stainless Steel
2	Stem	316
3	Locking Piece	316
4	Valve Body	316
5	Bearing	PEEK
6	Lock Nut	316
7	Seat Gland	316
8	Bearing	PEEK
9	Ball	316
10	Plug	316
11	Seat	PEEK
12	O-Ring	FKM
13	Seat Reatiner	316
14	Thrust Washer	PEEK
15	Retainer Ring	PTFE
16	O-ring	FKM
17	Stem Backup	PEEK

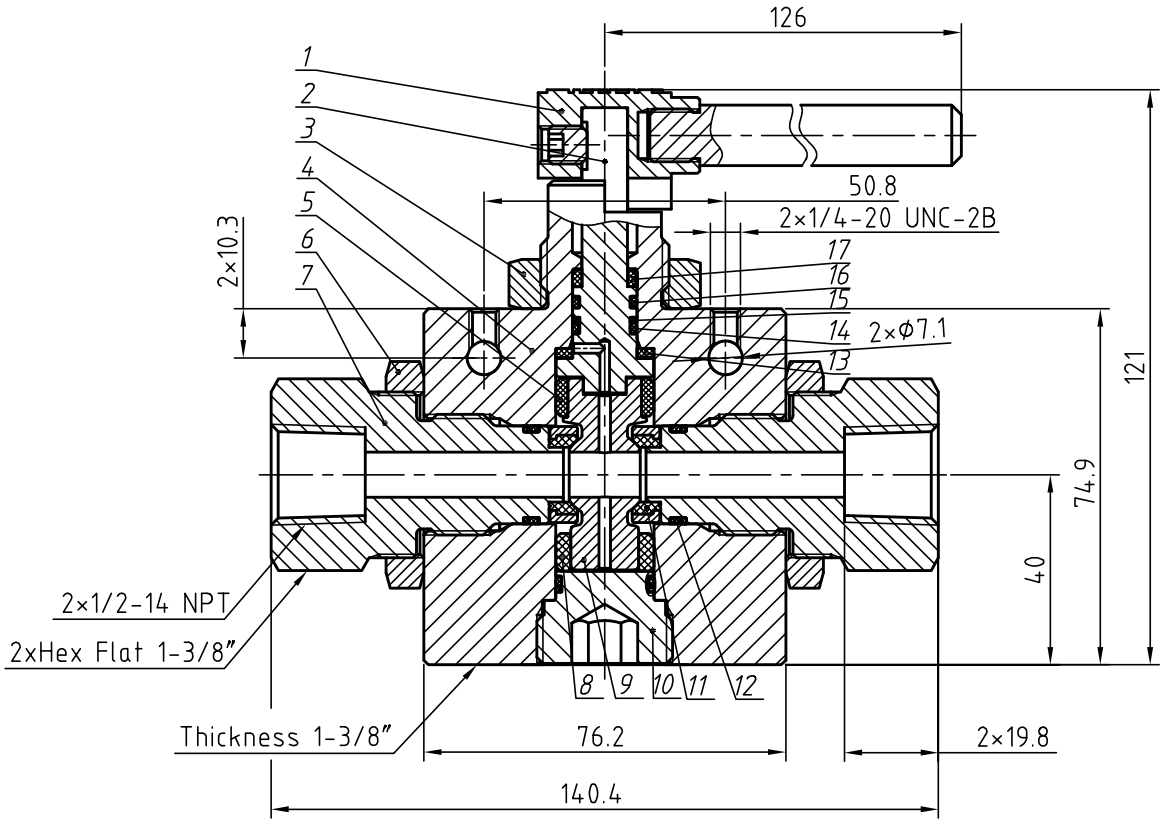

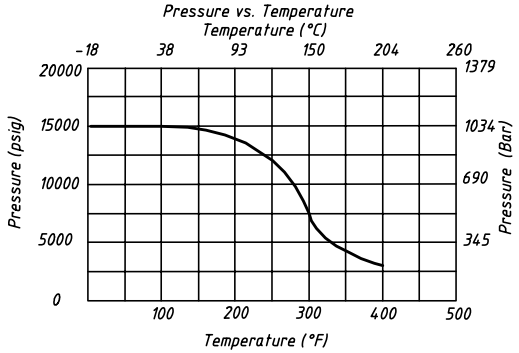

NOTE: Dimensions for reference only.

Linear unit of size: mm			Ball valve				HTA-PROM ТЕХНОЛОГИИ РЕШЕНИЯ СЕРВИС
	signature	date					
design			versions	1	proportion	1:1.5	HBVN15-2B-F8N-S
audit							
ratify				Page 1/1			