Valve Features	
Maximum working pressure	15000psig(1034bar)
Working temperature	0~400°F(-17.8~204℃)
Orifice	0.5in.(12.7mm)
Cv	10.2

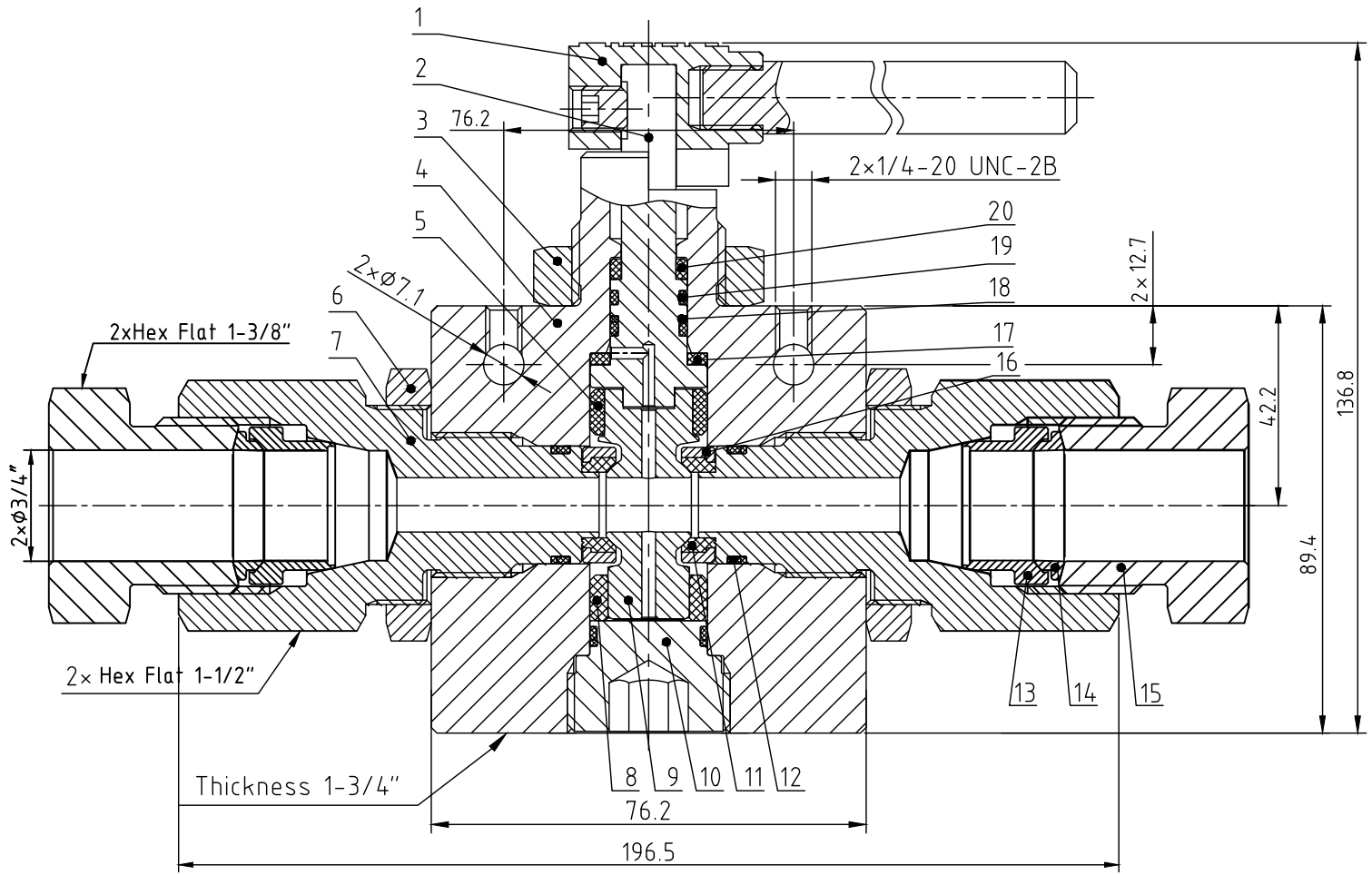

Item	Component	Material
1	Handle	Stainless Steel
2	Stem	316
3	Panel Nut	316
4	Body	316
5	Bearing	PEEK
6	Lock Nut	316
7	Seat Gland	316
8	Bearing	PEEK
9	Ball	316
10	Plug	316
11	Seat	PEEK
12	O-Ring	FKM
13	Front Ferrule	316
14	Rear Ferrule	316
15	Nut	316
16	Seat Retainer	316
17	Thrust Washer	PEEK
18	Retainer Ring	PTFE
19	O-ring	FKM
20	Stem Backup	PEEK

Pressure vs. Temperature

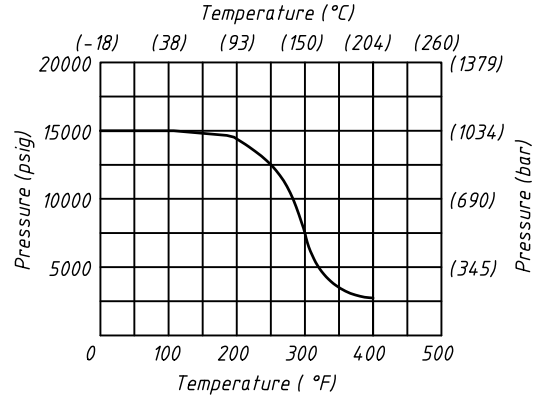

NOTE: 1、Dimensions for reference only.

Linear unit of size: mm			Ball valves				HTA-PROM ТЕХНОЛОГИИ РЕШЕНИЯ СЕРВИС
	signature	date					
design			versions	1	proportion	1:1	HBVN15-2C-F12LP-S
audit							
ratify					Page 1/1		