Valve Features	
Set pressure	70-150psig
Max inlet pressure	300psig
Max Allowable outlet pressure	225psig
Working temperature	-40℃~148℃
Orifice	4.8mm

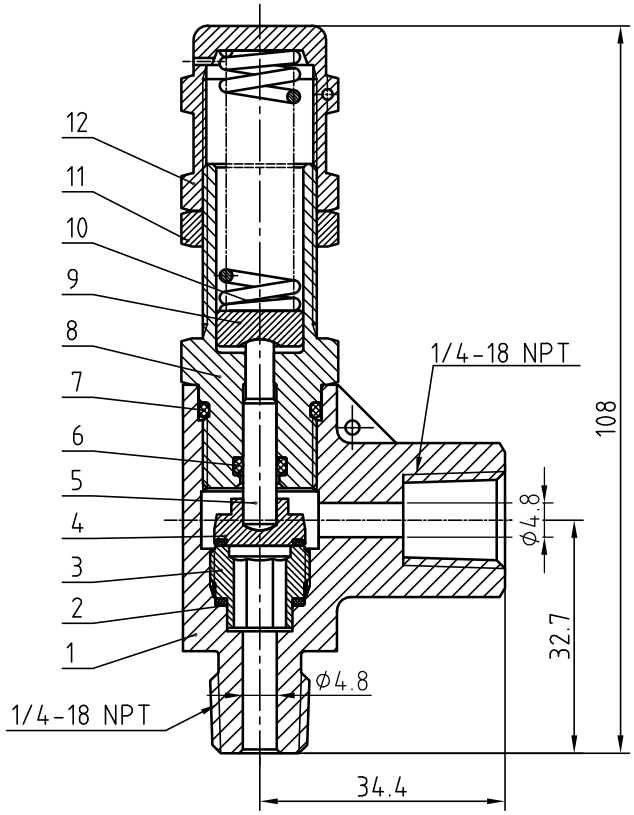

IDX	Designation	Materials
1	Body	316L/A182
2	Gasket	PTFE
3	Seat	316L/A479
4	Bonded disc	316 L/A479+FKM
5	Stem	316 L/A479
6	O-ring	EPDM
7	O-ring	EPDM
8	Bonnet	316L/A479
9	Spring Support	316L/A479
10	Spring	S17700 SS/AMS 5678
11	Lock Nut	316L/A479
12	Bonnet Cap	316L/A479

NOTE:Dimensions for reference only.

Linear unit of size: mm			Proportional Relief Valve				НТА-ПРОМ ТЕХНОЛОГИИ РЕШЕНИЯ СЕРВИС
	signature	date					
design			versions	1	proportion	1:1	RVN2-2A-MF-4N-EP-S/L2
audit	✓	10.09.2025					
ratify				Page 1/1			